PUBLIC UTILITY DISTRICT NO. 1 OF CLALLAM COUNTY

ELECTRIC SERVICE REGULATIONS

JUNE 14, 2021

ADOPTED BY RESOLUTION 2201-21

TABLE OF CONTENTS

SECTION 1 - DEFINITIONS 5

A. ANNUAL LOAD FACTOR 5

B. APPROVED LESSEE 5

C. BILLING PERIOD 5

D. GENERAL SERVICE 5

E. CONTRACTED SERVICE LOCATION 5

F. CONTRIBUTION IN AID OF CONSTRUCTION 5

G. CONVENTIONAL SUBDIVISION 5

H. CUSTOMER 5

I. DEVELOPER 5

J. DISTRICT 5

K. FINANCIAL INSTITUTIONS 5

L. HOME ENTERPRISE AND HOME-BASED INDUSTRY 6

M. IDLE FACILITIES 6

N. LARGE INDUSTRIAL SERVICE 6

O. LOW INCOME 6

P. MANAGER 6

Q. MANUFACTURED HOME 6

R. NONCONVENTIONAL SUBDIVISION 6

S. OWNER 6

T. PERSON 6

U. RESIDENTIAL SERVICE 6

V. SHARING 6

W. TRENCH 7

X. TRENCH COST 7

SECTION 2 - GENERAL REGULATIONS 8

A. CONTRACTS, RATES, AND RESALE 8

B. SERVICE NOT COVERED IN RATE SCHEDULES 8

C. DELIVERY POINT 9

D. TAX ADJUSTMENT 9

E. DISCONTINUANCE OF SERVICE 9

F. BOARD OF COMMISSIONERS 9

G. APPLICABILITY OF DISTRICT SERVICE REQUIREMENTS AND ACCESS POLICY 9

H. RIGHT TO REFUSE SERVICE 10

I. RIGHT TO ENTER UPON PREMISES 10

SECTION 3 - LINE EXTENSION REGULATIONS 10

A. GENERAL PROVISIONS 10

B. RESIDENTIAL LINE EXTENSIONS 13

C. GENERAL POWER LINE EXTENSIONS (NON-RESIDENTIAL) 13

D. LARGE INDUSTRIAL POWER LINE EXTENSIONS 14

E. DEVELOPER LINE EXTENSIONS 14

F. IRRIGATION LINE EXTENSIONS 14

G. IDLE FACILITIES 15

SECTION 4 – DISTRICT'S OBLIGATIONS 16

A. INTERRUPTION OF SERVICE 16

B. CLAIM'S FOR DAMAGES 16

SECTION 5 - CUSTOMER'S OBLIGATIONS 16

A. INCREASED USE 16

B. BALANCING OF LOAD 16

C. CLAIMS FOR DAMAGES 16

D. ACCESS TO DISTRICT FACILITIES 16

SECTION 6 - SERVICE REGULATIONS 17

A. AVAILABILITY OF SERVICE 17

B. TEMPORARY SERVICE 17

C. SERVICE INSTALLATION AND MAINTENANCE 18

D. SERVICE ENTRANCE 19

E. CUSTOMER EQUIPMENT ON POLES 19

F. DETERMINATION OF DEMAND AND REACTIVE 19

G. POWER FACTOR ADJUSTMENT 19

H. ENERGY EFFICIENCY 20

SECTION 7 - CONNECTION OF MOTORS TO DISTRICT FACILITIES 21

A. GENERAL 21

B. LARGE MOTORS 21

SECTION 8 - DEPOSITS, CHARGES, PAYMENTS AND BILLING 21

A. DEPOSITS 21

B. CHARGES 21

C. PAYMENTS 22

D. RETURNED CHECK CHARGE 23

E. FIELD COLLECTION CHARGE 23

F. CUSTOMER'S RIGHTS 23

G. RECONNECTION CHARGE 24

H. METER TESTING 24

I. METER TAMPERING CHARGE 25

J. METER READING, ESTIMATIONS 25

K. BILLING 25

SECTION 9 - VALIDITY AND EFFECTIVE DATE 26

A. VALIDITY 25

B. EFFECTIVE DATE 26

SECTION 1 - DEFINITIONS

A. ANNUAL LOAD FACTOR

The quotient of the annual electric usage divided by the product of the highest monthly peak demand multiplied by 8,760.

B. APPROVED LESSEE

A person or legal entity furnishing evidence of a lease of sufficient duration and provisions, in the opinion of the General Manager of the District, to justify application of the Line Extension Policy for line construction to serve a proposed facility.

C. BILLING PERIOD

The normal billing period will be from 27 to 33 days and adjusted so that there are twelve (12) billing periods per calendar year. The District reserves the right to adjust billing periods in order to facilitate operations.

D. GENERAL SERVICE

Commercial and individual customers including schools, public agencies and other users not eligible under other rate schedules, further classified by demand as small, medium and large.

E. CONTRACTED SERVICE LOCATION

The designated site on a parcel of land where service is requested by the person(s) initiating line construction, which site determines both timing and ownership of refunds which become available. To qualify as a Contracted Service Location, a site must be of adequate size to accommodate the facility stipulated in the Customer's contract.

F. CONTRIBUTION IN AID OF CONSTRUCTION

The construction cost of a line extension as paid by the Customer for lines installed by the District or installed by the customer under a modified “Line Extension Agreement”.

G. CONVENTIONAL SUBDIVISION

A subdivision of land such that installation of electric utility lines is required by the County for approval for marketing of building sites.

H. CUSTOMER

A person, commercial business, or other entity that has, or has applied for, a service account with the District.

I. DEVELOPER

A person, commercial business, or legal entity requesting service to two or more dwelling sites, to a manufactured home rental facility, or to a multi-family structure.

J. DISTRICT

Public Utility District No. 1 of Clallam County, Washington.

K. FINANCIAL INSTITUTIONS

Banks, credit unions, and savings and loans.

L. HOME ENTERPRISE AND HOME-BASED INDUSTRY SERVICE

Home-based enterprise, business, or industries shall be defined by requirements set forth in the Clallam County Zoning Code under Zoning Code (CCC 33). When meeting these requirements, the service shall be classified as a Residential Service.

M. IDLE FACILITIES

Overhead and underground lines and equipment which were installed as a means of providing service to customers and have not been used by the customer for active service for a period of one year or more.

N. LARGE INDUSTRIAL SERVICE

Customers with metered loads exceeding 1000kW subject to conditions described in the most current version of the District's Electric System Rate Schedules.

O. LOW INCOME

Meeting the guidelines established by state or federal regulations and administered by Community Action Council.

P. MANAGER

The General Manager of Public Utility District No. 1 of Clallam County, Washington, or authorized agent thereof.

Q. MANUFACTURED HOME

A structure for residential occupancy (eating, sleeping, and sanitation accommodations) that is built on a permanent chassis designed to be transportable and is a minimum of 8 feet wide and 40 feet long excluding the tongue. (Formerly referred to as "mobile home.")

R. NONCONVENTIONAL SUBDIVISION

Any other subdivision of land, including short-platting, where installation of electric utility lines is not required under County regulations.

S. OWNER

For Sharing purposes, the Owner of property shall be deemed the holder of the Statutory Warranty Deed, EXCEPT that in the event of contract sale, the Owner shall be deemed to be that person (those persons) purchasing the property by Real Estate Contract.

T. PERSON

Human Beings, associations, co-partnerships, and corporations, whether acting by themselves or by a servant, agent, or employee.

U. RESIDENTIAL SERVICE

Applies to residential and farm customers for domestic, seasonal or recreational use. A residential service is service to any building, facility or structure that is associated with a residence, either single or multi family. For a farm to qualify for this schedule, it must include a residence.

V. SHARING

Monies collected by the District from Customers connecting to a line extension wherein other Customers connected to that line have paid a Contribution in Aid of Construction as detailed in Section 3.

W. TRENCH

Trenching, bedding, backfilling, compaction, restoration, and maintenance of subsequent ditch settling.

X. TRENCH COST

The unit cost of trenching as established by the District used for computing construction cost sharing.

SECTION 2 - GENERAL REGULATIONS

A. CONTRACTS, RATES, AND RESALE

Electric service shall be provided upon approval of written application; such application being a contract for service, subject to the Electric Service Regulations of the District. Rates shall be as detailed in the applicable Rate Schedule. Where, by special consideration of the Manager, more than one Customer receives service from one metering point, the basic charges may be multiplied by the number of Customers. Unless otherwise provided in the contract, the Customer shall not resell the electric energy provided under this Regulation. Any customer desiring to resell electric energy received under the terms of this contract shall be required to enter into a SUBMETERING SERVICE PROVIDER CONTRACT with the District.

1. Effective Date of Contracts

   All service contracts shall take effect from the day they are signed, and rates will be charged and bills rendered from the date the premises are connected with electrical power.

2. Term of Contracts

   All service contracts shall be binding and, unless otherwise specified, shall continue in effect until after notice of discontinuance is filed in the office of the District.

3. Customer's Protection

   No inspector, agent, or employee of the District may ask, demand, receive, or accept any personal compensation for any service rendered to Customers of electric power, or other persons, in connection with supplying or furnishing electric power by the District.

4. Obligations of District to be in Writing

   No promise, agreement, or representation of any employee or agent of the District with reference to furnishing of electric power shall be binding on the District unless the same shall be in writing, signed by the Manager in accordance with the provisions in these Regulations.

5. Liability for Violating Provisions of these Regulations

   Any person violating any of the provisions of these Regulations shall be prosecuted in accordance with applicable laws; and in addition, the service of any person found guilty of violating the provisions of these Regulations may be disconnected, and the person violating shall be liable for all damage and expenses incurred by the District and for all electric power used by reason of such violation.

6. Requirement to Meet Building Code Standards

   No building shall qualify for service connection if it does not meet or exceed any Regional, State, County, Municipal, or District building code or energy-efficiency standard.

B. SERVICE NOT COVERED IN RATE SCHEDULES

Service may be supplied to Customers not coming within the scope of the regular Rate Schedules

of the District; provided that such service shall be covered by separate contract, which may be subject to provisions of the District's power purchase agreements, and shall be approved by the Commissioners of the District. Examples include:

1. New Service(s) involving line extensions in excess of 5,000 feet where estimated line operation, maintenance or capital replacement costs cannot be supported by estimated revenue within the applicable established rate schedule(s).

2. New Service(s) that are primary metered

3. New Service(s) subject to non-standard regulatory or legal requirements and conditions

C. DELIVERY POINT

A delivery point will be established by the District for each customer.

D. TAX ADJUSTMENT

The amount of the total of any or all revenue, kilowatt hours, or other form of tax imposed by any municipal, federal, or state taxing body upon the District, may be apportioned by the Commission of the District according to the territory in which such tax or taxes may be effective and amongst the various different classes of service furnished therein, and shall constitute an additional charge to any amounts which may be billed to any Customer under any rate schedule or special contract covered by these Regulations.

E. DISCONTINUANCE OF SERVICE

The District reserves the right to cut off the supply of electric power and discontinue service in the event the Customer:

1. shall fail to comply with the District's Service Regulations, Requirements, Facility Access Policy or provisions of the Service Contract, or,

2. after due-process, non-payment of a District invoice. Service may be disconnected by the District at any time to prevent fraudulent use or to protect its property. Reconnection will occur after satisfactory remedy to the District. (Also see Section 8, Items C.2 and C.3.)

F. BOARD OF COMMISSIONERS

The Board of Commissioners of Clallam County PUD establishes policies for the District. Any customer who wishes to comment on, make a recommendation regarding a policy, or who disagrees with a decision made by District staff may address the Commissioners at a regularly scheduled Board meeting.

G. APPLICABILITY OF DISTRICT ELECTRICAL SERVICE REQUIREMENTS AND FACILITY ACCESS POLICY

In addition to these Regulations, the District’s Electrical Service Requirements and Facility Access Policy are also applicable to the installation, operation and maintenance of all District electrical facilities.

H. RIGHT TO REFUSE SERVICE

The District reserves the right to refuse to connect, or render service to, any applicant or any Customer where such connection and/or where the applicant or Customer has not complied with State, Municipal, or District Electric Service Regulations or Requirements or Facility Access Policy concerning the rendition of service or has an unpaid obligation to the District.

I. RIGHT TO ENTER UPON PREMISES

The District shall have the right, through its agents or employees, to safely enter the property of the Customer at all times for the purpose of: reading, inspecting, repairing, or removing metering devices, appliances, and wiring of the District; trimming or removing trees and brush around meters, transformers, or other equipment that may interfere with the safe and efficient operation of the utility system; maintenance of utility lines, both overhead and underground; and inspection, replacement, installation and removal of District facilities.

SECTION 3 - LINE EXTENSION REGULATIONS

A. GENERAL PROVISIONS

1. Location

Permanent line extensions will normally be built in the most direct route from the nearest source of supply. However, availability of easements and maintenance considerations may affect line routing. Placement of line extensions shall be at the discretion of the Manager of the District.

2. Trenches

The Customer or Developer shall provide trenches to District specifications for all underground installations.

3. Easements

The Customer or Developer shall provide easements as required for the extension, in the location and of the width specified by the District.

4. Ownership of Facilities

Ownership of any and all facilities constructed under the District's Line Extension Regulations shall remain with the Public Utility District No. 1 of Clallam County, Washington. Ownership of Customer or Contractor installed extensions will begin when approved and energized by the District.

5. Increase, Maintenance, and Upgrading of Facilities

Any costs incurred to provide any increase in facilities beyond those requested or needed to serve the load of an individual Customer or Developer (see Section 5.A) shall be absorbed by the District, provided that the Manager of the District shall be the final authority as to the size of facilities to be installed, and provided that certain standard and minimum facilities may be established as customary for District installation. Maintenance and upgrading of facilities for District purposes following initial construction shall be the responsibility of the District.

6. Construction Cost Sharing

   a. Any Contribution in Aid of Construction paid by the initial Customer(s) for which a line extension is built and which in total exceeds $500 shall be distributed over the number of primary poles installed and/or the number of feet of underground line installed, and shall become the basis for future Sharing of costs by additional Customers using the line.

   b. Sharing on construction costs shall continue for seven (7) years from the time service is available from the line or until the first time after such Share shall become less than Five Hundred Dollars ($500) or until the property served by the line is sold, whichever comes first. The purchaser of a Pioneer or Shareholder property is not eligible to receive Sharing.

   c. Shares shall be computed based on that portion of the line to be used by the additional Customer and on the resulting total number of Customers served by the line segment involved. For overhead lines, Sharing shall be on a per-pole basis; for underground lines, Sharing shall be on a per-foot basis. Sharing of monies collected shall be based on the number of users of each segment of line who are still eligible for Sharing refunds.

   d. The monies collected for "Sharing" of the extension cost shall be distributed to eligible shareholders within 120 days after completion of construction.

   e. Trench cost allowance will be included in Sharing costs.

7. Refund of Sharing

   Line construction shares as stipulated in Section 3 shall be refunded to the Owner of the property at the time the Sharing becomes available, EXCEPT where payment for construction has been made by an Approved Lessee, in which case refund shall be made to the lease holder, and EXCEPT where property is held as a Life Estate, refund shall be made to that Person(s) making payment for construction.

8. Mailing of Sharing

   Any payment derived from Sharing shall be mailed to the last known address of the present Owner. When a Sharing has been mailed to such Person(s) and has been returned to the District due to lack of proper mailing address, the District shall make all reasonable efforts to locate the present Owner. However, in the event the present Owner may not be located, after one year's time has elapsed, the monies shall become the property of the District.

9. Contracted Service Location

   When a line extension is initiated by a Customer, the location on the property where service is requested shall become a part of the contractual agreement. Acceptance of service by the Customer shall be deemed evidence of proper identification of that location. In the event that the parcel first served is divided by sale prior to Sharing, ownership of monies and entitlement to Sharing shall run with the parcel of land encompassing the Contracted Service Location. The Customer may modify the Contracted Service Location by notifying the District in writing prior to service first being connected at the site; and when such notification is acknowledged by the District, the new site shall become the Contracted Service Location, and the Owner of said parcel shall be entitled to any and all applicable Sharings.

10. Construction and Ownership of Extension

The Customer(s) shall bear the entire cost of the extension and may elect either to have the extension constructed by the District in compliance with this Section or by a contractor of choice, in accordance with all specifications of, and subject to inspection (the cost of such inspection, etc. shall be paid for by the Customer or Customers) and approval by the District. Upon completion of the contractor extension, title thereto, together with all necessary franchises, easements, rights-of-way, and/or permits pertaining to the extension shall be conveyed to the District, and the District agrees to assume obligations and liabilities for maintenance and operation. In the event that the extension is built by a contractor:

a. The extension shall be guaranteed by the Customer, for a period of not less than one year, against physical defects. Electrical service will not be made available until all requirements are met by the Customer(s).

b. The Customer shall have the option of entering into a modified "Line Extension Agreement" whereby future Customers using the line will be required to pay certain costs of Sharing, as stipulated by the District's Regulations. The Customer shall then furnish evidence of the cost of the extension, and the District shall record that cost as a sharable "Contribution in Aid of Construction" for the contracted service location of the property to be served. Such evidence must be provided within six (6) months of completion or the line will be considered a free line and not subject to sharing. The Customer shall be entitled to Sharing only while the balance of the "Contribution in Aid of Construction" exceeds $500, and within the time limits established by District Regulations.

11. Proposal Cost

The District will provide line extension cost estimates to the Customer or potential developers. If the cost of preparing the estimate(s) exceeds $1,000, the customer or developer will pay in advance the estimated engineering cost for amounts in excess of $1,000.

12. Unit Costs

The District Manager will establish unit costs (based on actual District cost) for components of the electrical system used in line extensions and a unit cost trench allowance. These costs will be changed as needed to reflect current actual expenses.

13. Cost Accounting

The District will review the actual cost of each line extension. If the actual cost exceeds the estimate by more than $50, the Customer will be invoiced for that amount in excess of the estimate; or if the estimate exceeds the actual cost by more than $50, a refund of the excess will be made to the Customer.

B. RESIDENTIAL LINE EXTENSIONS

1. New Service Charge(s)

The District's New Service Charge(s) shall be paid prior to connection to District facilities, and shall provide for installation of a transformer, overhead service conductor installation, underground service inspection and connection, and the District's portion of the metering equipment for a service to a single-family residence. In addition, a service pole may be installed, without cost to the Customer, if that service pole is required for the convenience of the District.

2. Construction Costs

Where facilities construction is required to make service available to a single-family residence, the costs to the Customer(s) shall be determined as follows:

a. The estimated cost of the facilities to be constructed by the District plus the New Service Charge will be determined by the District.

b. The Customer(s) desiring service shall pay to the District the estimated cost of the facilities plus the New Service Charge.

d. Cost sharing will be included in construction cost estimates.

3. Construction Cost Sharing

Construction costs shall be shared by additional Customers using the line in accordance with the GENERAL PROVISIONS of this Section.

C. GENERAL POWER LINE EXTENSIONS (NON-RESIDENTIAL)

1. New Service Charge(s)

The New Service Charge(s) shall be paid prior to connection to District facilities.

a. For General Power Accounts with Anticipated Annual Load Factors Equal to or Greater than 40 Percent. The District's New Service Charge(s) shall provide for installation of transformers, overhead service conductors, underground service connection and the District's portion of metering equipment.

b. For General Power Accounts with Anticipated Annual Load Factors Less than 40 Percent. At the discretion of the Manager, some portion of the transformation and metering cost shall be paid by the Customer. Surcharges collected for transformation or metering shall not be sharable.

c. Primary Metering. The cost of primary metering shall be paid by the Customer, unless such primary metering is required by the District for its benefit.

e. Service Pole. A service pole may be installed without cost to a General Power Customer if such service pole is required for the District's convenience.

2. Construction Costs

Where facilities construction is required to make service available to a General Power account, the costs to the Customer shall be determined as follows:

a. The estimated cost of the facilities to be constructed by the District plus the New Service Charge(s) will be determined by the District.

b. The General Power Customer(s) desiring service shall pay to the District the estimated cost of the facilities plus the New Service Charge(s).

c. Cost sharing will be included in construction cost estimates.

3. Construction Cost Sharing

a. General Power line extension costs shall be shared as provided for in Section 3.A. except where a multi-phase line has been provided and a Customer utilizes a portion of the line for single-phase (or VØ) service, the single-phase (or VØ)
Customer's costs shall be based on single-phase (or VØ) costs from the Table of Construction Costs in use at the time the line was built.

b. Transformer installation charges for three-phase service shall be a Contribution in Aid of Construction and eligible for sharing by other three-phase customers.

D. LARGE INDUSTRIAL POWER LINE EXTENSIONS

Line extensions for industrial and large power accounts shall be made by individual arrangement.

E. DEVELOPER LINE EXTENSIONS

1. Construction Costs

A Developer requesting extension of electric lines in Conventional or Non-Conventional Subdivisions or to provide service for manufactured home rental facilities or multi-family dwelling structures shall pay to the District the District's estimated cost of the required facilities prior to work being scheduled.

2. Construction Cost Sharing

Line extensions occurring as a result of Developer activities may be subject to sharing. Contribution in Aid of Construction shall be shared in the same manner as in Section 3.C.3. Only that portion of a line utilized by another party shall be included in cost sharing calculations.

F. IRRIGATION LINE EXTENSIONS

Line extensions built to serve irrigation pumps and/or nonresidential farm installations exclusively shall be constructed at the Customer's expense.

The District's New Service Charge(s) shall provide installation of a transformer(s), overhead service conductors, and the District's portion of the metering equipment for the irrigation service. New Service Charge(s) shall be paid prior to connection to District facilities.

Irrigation line construction costs shall be shared by additional Customers using the line, in the same manner as residential/commercial line construction costs.

G. IDLE FACILITIES

Line extensions will be owned and maintained by the District as long as customers utilize them for electric service. When it is determined that District facilities have been idle for a period of one year, the District has the right to remove the facilities or parts thereof. The District will attempt to contact the property owner to determine if he/she has a future need for the idle facilities. Customers who are not using any energy but wish to have the facilities available can do so by paying a monthly service charge as determined by the District.

SECTION 4 - DISTRICT'S OBLIGATIONS

A. INTERRUPTION OF SERVICE

The District shall exercise diligence and care to furnish and deliver a continuous supply of electric power to the Customer, but will not be liable for interruption or shortage of supply due to accident or conditions beyond the District's control. In the event of such interruption or shortage, the District shall not be liable for any loss or damage occasioned thereby, nor shall such interruption or shortage constitute a breach of its contract.

B. CLAIMS FOR DAMAGES

The District has a procedure to evaluate claims for damages. A Claim for Damages form will be provided to parties, at their request, who have experienced property damage as a result of District action or as a consequence of connection to District facilities. Provision of a claim form is not an admission of liability. The District will investigate each claim for damages and respond to the claimant.

SECTION 5 - CUSTOMER'S OBLIGATIONS

A. INCREASED USE

1. In order to prevent damage to the District's equipment and impairment of its service, the Customer shall give the District notice before making any additions to his connected load so that the District, at its option, may provide such facilities as may be necessary for the furnishing of increased service. Such additions include, but are not limited to, electric heating. The District reserves the right to limit service to any Customer.

2. When increased load requires underground service conductor must be changed, the Customer must pay the expense of the installation of the new conductor and conduit, and the District will provide reconnection to its facilities.

3. In cases where a Customer load increases enough at one time to require upgrading of District electrical facilities, the Customer will pay the charge set forth in the Schedule of Deposits and Charges. In cases where system upgrade to primary distribution, transmission, or substation is required, the Customer will pay the upgrade cost (subject to Section 3.A.6). (Exception: where the District determines that service conductor must be replaced with primary conductor to maintain adequate voltage for the original service panel size, the District will perform the work at no charge.) Where gradually increasing loads from multiple Customers requires upgrading of District electrical facilities, the upgrade will be at no charge to the Customers.

B. BALANCING OF LOAD

The Customer or contractor shall connect any equipment to keep the load, under normal operating conditions, balanced within plus or minus 10 percent of the average load across the phase wires.

C. CLAIMS FOR DAMAGES

If a customer believes that District action or connection to District facilities may have resulted in property damage, the customer should notify the District as soon as possible. The expense of

contractor repairs and/or parts may not be reimbursed unless the District has first been contacted and had opportunity to respond to the situation. The District's Claim for Damages form is available for use by the Customer and will be helpful in making certain all pertinent information is provided.

D. ACCESS TO DISTRICT FACILITIES

The Customer shall not permit access to District equipment or lines by anyone other than authorized representatives of the District. The Customer shall obtain and grant all necessary permission to enable District Representatives to install, maintain, service, or remove its facilities located on the Customer's property.

SECTION 6 - SERVICE REGULATIONS

A. AVAILABILITY OF SERVICE

1. Customer Requests Service

A Customer, before proceeding with the wiring or installation of equipment, shall request a determination of the availability of service from the District.

2. Available Electric Service

The District will advise the Customer of the most suitable phase and voltage available on established circuits. Service will be installed, connected, supplied, and maintained in accordance with the District's Electrical Service Requirements and these Regulations.

3. Protective Devices

Suitable protective devices on the Customer's premises may be required whenever the District deems such installation necessary to protect its property or that of its other Customers.

B. TEMPORARY SERVICE

1. Availability

Temporary service will be supplied under applicable rate schedules and in accordance with the following conditions:

a. The Customer will pay in advance the estimated cost of furnishing and removing the required facilities, less the value of materials returned to stock; provided, that where service conductors and a meter are required; the advance payment will be as set forth in the applicable Schedule of Deposits and Charges.

b. The Customer will pay for such service at the monthly rate applicable to the class of service.

c. Temporary service will be provided for one year from the date the service is connected to District facilities. The Customer may request continuance of temporary service annually thereafter, and the District may continue such service at the Manager's discretion. If continuance of temporary service is not determined to be safe, the Customer will be notified of termination of such service and will be given a reasonable time, not to exceed one year, to convert to a permanent service.

C. SERVICE INSTALLATION AND MAINTENANCE

1. Electric Service Requirements

The District's Electric Service Requirements are applicable to every service in addition to the subsections below.

2. Overhead Services

Overhead service conductors will be installed by the District and attached to a connection point, acceptable to the District, provided by the Customer on the Customer's facility. In the case of metering on a District pole, the District will attach its conductors to the pole and connect to the Customer's wiring thereon.

3. Service Poles

The District will furnish and install any service poles where they are required. Payment for service poles shall be as determined in Section 3 - Line Extension Regulations.

4. Underground Services

Underground service conductors will be provided and installed by the Customer or contractor, except that they will be connected by the District to District facilities. **Residential** underground service conductors must be installed to District specifications and inspected and approved by a District representative prior to backfill.

5. Maintenance of Services

a. The District will maintain the service conductors between the District's transformer and the connections on the source side of the customer's weather-head on all overhead residential, commercial and industrial services.

b. **Residential** underground service conductors installed to District specifications between a District facility and the Customer's meter will be maintained by the District after acceptance and a one-year warranty period.

c. Apartments and Condominiums

The underground service or services to any multi-unit residential structure or structures containing more than 4 individually metered dwelling units shall be classified as commercial with respect to the requirements of this section.

d. **Non-residential** underground service installed from the District transformer to the customer's point of metering will be maintained by the customer or the customer's contractor at the customer's expense. The District will assist, by request, in the maintenance by providing available resources at the customer's expense.

e. The Customer's point of metering of an instrument transformer installation is considered to be at the instrument transformer.

f. Whenever a Customer requests changes to the service that affect the maintenance responsibility, the Customer will be so advised.

D. SERVICE ENTRANCE

1. Location of Service Entrance

The applicant for service shall determine from the District the location of the service entrance and metering equipment. Any wiring installed without first determining service entrance and/or meter locations as covered above is done at the risk of having to relocate the service to conform with the requirements of the District.

2. Number of Attachments

All service entrances will be so located that the service conductors installed by the District will reach the service entrance by attachment at only one location on the building.

3. Specific Requirements

Specific requirements are contained in the District's Electrical Service Requirements.

E. CUSTOMER EQUIPMENT ON POLES

No equipment, devices, or wiring, other than service entrance equipment belonging to a Customer, shall be attached to District-owned poles except by special permission from the District; and any such attachment shall be done strictly in accordance with District specifications.

F. DETERMINATION OF DEMAND AND REACTIVE

1. Load Requirements

Demand metering shall be installed on services when demand or anticipated demand exceeds 50kW. Reactive metering shall be installed when the actual or anticipated power factor of the load is less than 98 percent lagging.

2. Time Interval

Where the rate is based on kW demand, the kW demand shall be the highest 15-minute demand in the month, as determined by suitable indicating or recording instruments.

3. Demands of Fluctuating Loads

For demands that are widely fluctuating, there shall be added to the 15-minute interval demand described in rate schedules an additional demand equal to 40% of the positive difference between the maximum one minute demand minus 150% of the 15 minute interval demand.

G. POWER FACTOR ADJUSTMENT

1. Power Factor Charge

Under rate schedules providing for a kW demand charge, adjustment for power factor shall be made as detailed in the applicable Rate Schedules.

2. Power Factor Correction

If the District determines that the power factor of a Customer's load is less than 95 percent lagging, the District may require the Customer to install proper equipment to prevent its power factor from falling below 98 percent.

H. ENERGY EFFICIENCY

1. Cities and County Areas

The current Washington State Energy Code and the current Washington State Ventilation and Indoor Air Quality Code are considered District-wide minimum energy efficiency standards for the applicable structures requiring code compliance.

a. The District shall consider a certificate of completion or similar occupancy permit issued by a building official and recognized by the State of Washington or other official and/or agency approved by the District, as evidence of satisfactory compliance with the District's energy efficiency standards in lieu of verification by District representatives.

b. Failure to secure the proper inspections and/or to comply with the District's energy efficiency standards will result in denial of service or disconnection.

2. Federal and Tribal Areas

In those areas of the District's service territory not regulated by the State of Washington, the current Washington State Energy Code and the current Washington State Ventilation and Indoor Air Quality Code, as applicable to Group R occupancy, shall be considered the District's minimum energy efficiency standards. The standards shall be applied by the District in a way that parallels enforcement by the State of Washington for the purposes of regulating the distribution of electric energy in a uniform manner and providing for the actual and prospective needs of the District.

a. District representatives shall be notified and allowed access to verify compliance with the District's energy efficiency standards.

b. Failure to comply with the District's energy efficiency standards will result in assessment of an Energy Resources Surcharge in order to receive or maintain new or altered electrical service.

SECTION 7 - CONNECTION OF MOTORS TO DISTRICT FACILITIES

A. GENERAL

Approval of the District is required before installation of any single-phase motor exceeding 5 horsepower or combination of single or poly-phase motors exceeding 15 horsepower.

B. LARGE MOTORS

Starting of any motor shall not produce more than a 2% dip in primary voltage, or more than a 3% dip in service voltage of any other customer. Larger voltage dips shall be mitigated at the expense of the motor owning customer.

SECTION 8 - DEPOSITS, CHARGES, PAYMENTS AND BILLING

A. DEPOSITS

1. Residential

   A deposit may be required from a residential Customer when applying for service and opening an account. An identity validation and credit assessment will be conducted for customers who are applying for service with Clallam County PUD. If a satisfactory credit rating is obtained through the assessment or you are an existing customer who has an established satisfactory credit rating with Clallam County PUD, you may be excluded from the deposit requirement. The deposit shall be as set forth in the District's Schedule of Deposits and Charges.

2. Nonresidential

   A deposit may be required from a nonresidential Customer unless the Customer has established a satisfactory credit record with the District. The amount of such deposit will be determined by the District after consideration of estimated billings (see Schedule of Deposits and Charges).

3. Additional or New Deposits

   Nothing in these rules shall prevent the District from requiring additional or new deposits when conditions warrant.

4. Refund of Deposits

   At the discretion of the District, deposits may be refunded or credited to an account when the Customer, by prompt payment of all bills rendered over a period of one year or more, has established a satisfactory credit rating. Deposit refunds or credits will be as set forth in the District's Schedule of Deposits and Charges. Deposits will be refunded upon termination of service after all outstanding amounts due the District have been paid.

B. CHARGES

Payment of charges, as set forth in the applicable Schedule of Deposits and Charges, will be required of all.

C. PAYMENTS

1. Bills Payable Within 28 Days

   All bills, for service rendered and minimum charges, are due when rendered and payable within 28 days from the statement billing date, unless otherwise specified, and if not so paid, become delinquent and subject to disconnection as outlined in Section 8, Item C.5.

2. Delinquent Payments

   When a Customer develops a history of delinquency with the District in that billings are not paid within a 28 day period as stipulated above, and further, are not paid for two or more occasions, which need not be consecutive, the District may, at its option, require a deposit or additional deposit as security.

3. Budget Payment Plan

   "Budget Payment Plan" shall be interpreted to mean that the Customer shall pay an estimated amount each month on or before the bill due date; and continuing on a regular monthly basis thereafter, and if not so paid, the amount may be deemed delinquent and subject to disconnection as outlined in Section 8, Item C.5.

   At the option of the Customer Service Supervisor, new Customers of the District, including all Customers who have not established credit with the District, may be placed on a Budget Payment Plan at a monthly amount estimated by the Customer Service Supervisor Such monthly payments are due on the date established, and if not so paid, shall result in the account associated with said payments becoming delinquent and being subject to disconnection as outlined in Section 8, Item C.5.

4. Right to Disconnect Service

   The right to discontinue service for default, as defined in Section 8, Item C.1, may be exercised whenever and as often as default shall occur; and neither delay nor omission on the part of the District to enforce this rule at any one or more times shall be deemed a waiver of rights to enforce the same at any time, so long as the default continues.

5. Notice of Pending Disconnection

   Written notice will be sent to a customer by first class mail five (5) days before service is discontinued under this regulation and will advise the Customer of the reason(s) for the disconnection action except in the case of fraudulent use of service or as per 8.D below, when the District may disconnect service without notice. For the purpose of this regulation, notice shall be considered to have been given when placed in the United States mail addressed to the Customer at his address as shown on the District's records.

   When it is necessary, in the opinion of the District, to mail a collection notice to any Customer (in addition to regular billing statement), a charge of the actual cost to the District may be added to the Customer's bill, in order that collection costs may be paid by those Customers creating said costs.

D. RETURNED PAYMENT CHARGE

An accounting service charge (Returned Payment Charge), as set forth in applicable Schedule of Deposits and Charges, may be made to a Customer if a payment tendered to the District as payment for utility service is not honored by the Customer's financial institution because of insufficient funds, the bank account's having been closed, submission of incorrect financial information, or other irregularity. Payment of a delinquent balance with a dishonored payment submission may result in immediate termination of service.

E. FIELD COLLECTION OR EXTENSION CHARGE

A Field Collection or Extension Charge, as set forth in applicable Schedule of Deposits and Charges, may be made to a Customer who has not responded to a Notice of Unpaid Account, requiring a District representative to make a personal visit that may allow for immediate electronic payment or arrangements for collection of the unpaid account.

F. CUSTOMER'S RIGHTS

1. Informal Conference

A Customer who disputes the amount of a bill when due, or who does not intend to pay the full amount of the bill or invoice when due, shall have the right to an informal conference with certain designated employees in the District.

a. Informal conferences shall take place during the normal working hours -- 8:00 a.m. to 5:00 p.m., Monday through Friday.

b. The Customer may either appear in person in the District's office or confer by telephone.

c. Such designated employees shall have the authority to reach agreements with the Customer for a deferred payment schedule of the particular bill.

2. Appeal Hearings

If a Customer is not satisfied with the determination of the District's designated employee during the informal conference, the Customer may schedule a hearing with the District Hearing Officer.

a. The Hearing Officer and any Deputy or Assistant Hearing Officers shall be management-level employees and shall be appointed by the Commission from employees whose other duties are not connected with the credit section.

b. A written or verbal appeal by a Customer must be filed with the Hearing Officer within five working days after the determination of the informal conference.

c. In response to a timely appeal, the Hearing Officer shall arrange an appeal hearing at a mutually convenient and accessible location or conduct the hearing by telephone. Such hearing must be scheduled during normal working hours -- 8:00 a.m. to 5:00 p.m., Monday through Friday, and within seven (7) days of receipt of the Customer's appeal.

d. If the Customer requests, a record will be made of the proceedings. The Hearing Officer may use a tape recorder or other means of preserving a record which he/she deems appropriate; the Customer may provide, at his/her own expense, a court reporter, or supplemental means of providing a record. The Customer shall have the right to counsel.

e. The Customer shall open the hearing with a statement of the nature of the appeal and shall present whatever evidence the Customer deems relevant. The Customer shall have the reasonable right to examine the records of the District relating to his/her account. After the Customer has completed presenting his/her appeal, the appropriate District personnel shall provide the District's position. The Customer shall have the right to rebuttal.

f. The Hearing Officer shall provide the Customer with a written decision setting forth (a) the nature of the Customer's appeal; (b) the decision of the Hearing Officer; and (c) the reasons for the decision of the Hearing Officer. The written decision shall be promptly sent to the Customer by certified mail and may also be communicated by telephone.

g. Service will not be disconnected while an appeal is pending provided that the Customer has complied with the above procedural requirements. The Customer shall have seventy-two (72) hours following the receipt of the written decision of the Hearing Officer to comply with the terms and conditions of the decision. If the Customer fails to take the action required by the Hearing Officer, including payment of a past-due bill, or if he/she refuses to accept receipt of the Hearing Officer's decision, the District may disconnect service without further notice to the Customer.

G. RECONNECTION CHARGE

Whenever service has been discontinued as per these Regulations, a charge, as set forth in the District's Schedule of Deposits and Charges, will be made for restoring service. In the event that the actual cost of labor, transportation, and overhead to cover the expense of such restoration exceeds the designated charge, the Customer shall pay the actual cost.

H. METER TESTING

When a Customer inquires into his/her billing for any particular month, the District will, upon request, have such meter reread and the service inspected for defects. Should the Customer then desire that the meter be tested, he/she shall be required to make a deposit, as set forth in the Schedule of Deposits and Charges, to cover the cost of making such test. The meter will then be tested.

Should the meter show an error of over two (2) percent, said deposit will be refunded to the Customer, the meter corrected, and the bill adjusted. If the test of such meter should show an accurate measure within two (2) percent, the deposit will be retained by the District to cover the cost of testing. Whenever it shall be determined that any meter has not been registering correctly, then an average bill may be rendered, based either on the nearest four preceding months' average use when the meter was in good order, or on the same month of the preceding year if the use is seasonal.

I. METER TAMPERING CHARGE

Any Customer receiving unmeasured or unauthorized electrical services is responsible for paying the full amount of said services reasonably determined by the District to have been diverted around the meter or received unmetered or unauthorized due to meter tampering, alteration, or replacement.

A Meter Tampering Charge, as set forth in Schedule of Deposits and Charges, will be added to the estimated billing for unmeasured or unauthorized services to cover the expense of District

equipment restoration. In the event that the actual cost of labor, transportation, and overhead to cover the expense of such restoration exceeds the designated charge, the Customer shall pay the actual cost.

J. METER READING, ESTIMATIONS

Meters will normally be read and bills rendered on a monthly cycle, except for Irrigation Service and certain remote or contract accounts. Readings may be done electronically.

If, in the opinion of the District, inclement weather or other extenuating circumstances make it impossible for the District to read meters for a temporary period, the District reserves the right to estimate meter readings and render bills based upon such estimates. Estimates will be based upon account history and weather factors. Actual energy consumption will be confirmed and adjusted as necessary with a subsequent regular meter reading cycle.

Closing meter readings will be done on the day requested by the Customer.

K. BILLING

1. Regular Bills

   Bills for the regular billing period will be rendered based upon the meter reading or estimate.

2. Closing Bills

   Closing bills will normally be rendered within seven (7) days of the Customer requested disconnect date.

3. Billing Error Adjustments

   The customer is financially responsible for all electric energy or water passing through their meter. In the event of a billing error, such as equipment failure or employee recording error, the District will make an adjustment to the billing on the basis of the best information available.

   In the event the adjustment is in favor of the customer (present or previous), the District will credit the customer's account or refund the credit. The retroactive billing computation will be limited to the 36-month period measured immediately prior to the time of the correction.

   In the event the adjustment is in favor of the District, a retroactive bill to the customer will be provided. The retroactive billing computation will be limited to the 36-month period measured immediately prior to the time of the correction. The customer may choose to pay the retroactive bill over a period of time as agreed to with the District.

SECTION 9 - VALIDITY AND EFFECTIVE DATE

A. VALIDITY

If any section, subsection, subdivision, sentence, clause, or phrase of these Regulations is for any reason held to be unconstitutional or void, such invalidity shall not thereby affect the validity of the remaining portions of these Regulations.

B. EFFECTIVE DATE

These Regulations are to take effect and be in force from and after the 14th day of June, 2021.

PUBLIC UTILITY DISTRICT NO. 1

OF CLALLAM COUNTY

ELECTRIC SERVICE REQUIREMENTS

June 14th, 2021

Adopted by Resolution 2201-21

CONTENTS

SECTION 1: GENERAL RULES 9

Section 1.1 Application for Service - Contract 9

Section 1.2 Compliance with Codes 9

Section 1.2.1 Conflict Resolution 9

Section 1.2.2 Variances 9

Section 1.3 Inspection Approval Required 9

Section 1.4 Space and Protection Provision by Customer 9

Section 1.4.1 Safe Access to Facilities 10

Section 1.5 Valid Address Required for Service 10

Section 1.5.1 Clear Permanent Meter Marking 10

Section 1.5.2 Owner Responsibility for Marking Meters 10

Section 1.6 Load Balance within 10 Percent 11

Section 1.7 Customer Equipment on District Poles 11

Section 1.7.1 Meter Location and Rewiring 11

Section 1.7.2 Cost of Relocation 11

Section 1.7.3 Failure to Comply With Requirements and Access Policy 11

Section 1.8 Energizing Service 11

SECTION 2: SERVICE WIRING 12

Section 2.1 General 12

Section 2.1.1 Availability of Service 12

Section 2.1.2 Phase and Voltage to Be Supplied 12

Section 2.1.3 Fault Current 12

Section 2.1.4 Service Refusal 12

Section 2.1.5 Access to Premises for Maintenance 12

Section 2.1.6 Protective Devices 12

Section 2.1.7 Conductor Common Legs Marked 12

Section 2.1.8 Overhead Service by District 13

Section 2.1.9 Underground Service Cable in Conduit by Customer 13

Section 2.2 Service Supply Conductors - Overhead 13

Section 2.2.1 District-Provided Service Poles 13

Section 2.2.3 Attachment Vertical Clearance 13

Section 2.2.4 Service Conductor Clearances Above A Roof 13
Section 2.2.5 Service Conductor Clearance above Ground 14
Section 2.2.6 Service Conductor Clearances from Openings 14
Section 2.2.7 Service Drop Attachment 14
Section 2.2.8 Low Building Provision 14
Section 2.2.9 Multiple Service Entrance-Spacing 15
Section 2.2.10 Service Entrance Clearance From Adjoining Property 15
Section 2.2.11 Rewiring Existing Service Entrance 15
Section 2.3 Underground Service Supplied by Customer 15
Section 2.3.1 Underground Service Cable "Tails" by Customer 15
Section 2.3.2 Lateral Not Enclosed 15
Section 2.3.3 Cables Rated for Service Environment 16
Section 2.3.4 District Standards for Cable Sizes and Types, Number of Runs and Conduit Sizes 16
Section 2.3.5 Cable Connection by District at District Facility 16
Section 2.3.6 Cable Connection By Customer at Service 16
Section 2.3.7 Maintenance of Underground Services 16
Section 2.3.8 Trench Inspection by District 17
Section 2.3.9 Splices Not Allowed 17
Section 2.3.10 Residential Service Cable Burial Depth 17
Section 2.3.11 Riser Conduits by Customer 17
Section 2.3.12 No LB Fittings in Service Conduit 17
Section 2.3.13 The Riser Bend 17
Section 2.3.14 Conduits Into Existing Transformers 18
Section 2.3.15 Conduit Sealing for Below-Grade Locations 18
SECTION 3: METERING 18
Section 3.1 General 18
Section 3.1.1 One Main Meter For Service Of Same Type 18
Section 3.1.2 Customer Provides Meter Mounting Equipment 18
Section 3.1.3 Meter Mounting Equipment Defined 18
Section 3.1.4 Series Metering Not Allowed 19
Section 3.1.5 Failure To Install Meter-Mounting Equipment 19

Section 3.1.6 Individual Meters Required 19
Section 3.1.7 Adding New Meters To Existing Service 19
Section 3.1.8 Demand Metering 19
Section 3.1.9 Reactive Metering 19
Section 3.1.10 Customer Monitoring 19
Section 3.1.11 Grounding of Metering Equipment 19
Section 3.2 Meter Locations 19
Section 3.2.1 General 19
Section 3.2.2 Location of District Facilities 20
Section 3.2.3 Location Not at Rear of Residence 20
Section 3.2.4 Meter on Outside Building Line 20
Section 3.2.5 Meters Shall Not Be Enclosed 20
Section 3.2.6 Meters Shall Be Grouped 20
Section 3.2.7 Safe Meter Location Required 20
Section 3.2.8 Meters Shall be Readily Removable 21
Section 3.2.12 Manufactured and Mobile Home Service location 21
Section 3.3 Mounting Heights and Clearances 21
Section 3.3.1 Drawings 21
Section 3.3.2 General 21
Section 3.3.3 Single Socket Meters 21
Section 3.3.4 Single Meter Pedestals 21
Section 3.3.5 Multiple Meter Sockets 22
Section 3.3.6 C.T. Meters Mounting Height 22
Section 3.3.7 Protect Meters from Hazards 22
Section 3.3.8 Meters More Than 6’ Above Grade 22
Section 3.3.9 Platforms for Flood Areas 22
Section 3.4 Access to Meter Equipment 22
Section 3.4.1 Meters Not Enclosed 23
Section 3.4.2 Paths to Meters Clear 23
Section 3.4.3 Walkway Over Open Ditch 23
Section 3.4.4 Walkway With Handrail Over Open Ditch 23
Section 3.5 Security Requirements 23

Section 3.5.1 Metered and Unmetered Conductors, Same Wireway 23
Section 3.5.2 Sealing Provisions of Service Equipment 23
Section 3.5.3 Single Sealing Hasp for Covers 24
Section 3.5.4 Unused Hubs or Openings Closed 24
Section 3.5.5 Watertight Meter Equipment 24
Section 3.6 Customer Furnished Meter-Mounting Equipment 24
Section 3.6.1 Socket Forms Allowed 24
Section 3.6.2 Line-side Installation of Meter Sockets 24
Section 3.6.3 Meters To Be Top Connected 24
Section 3.6.4 Cable Lugs Rated for Conductor 24
Section 3.6.5 Oxide Inhibitor Used On Aluminum Conductor 24
Section 3.6.6 Meter Base Bonding 25
Section 3.6.7 Automatic Circuit Closing Devices 25
Section 3.6.8 Surface Mounting of Meter Sockets 25
Section 3.6.9 Meter Socket Cover Retaining Rings 25
Section 3.6.10 Plumb and Rigid Mounting 25
Section 3.6.11 Bolt-in Meters 25
Section 3.6.12 Circular Cast or Drawn Sockets 25
Section 3.6.13 Five-Terminal Sockets Are Required For 120/208 25
Section 3.6.14 Box or Trough Sockets 25
Section 3.6.15 Seven-Terminal Meter Socket 26
Section 3.6.16 High Leg Connection 26
Section 3.6.17 Residential Single Phase, 400 Amps or Less 26
Section 3.6.18 Bypass Meter Bases 26
Section 3.6.19 Single-Phase Greater Than 400 Amp 26
Section 3.6.20 Single-phase General power or Industrial Services Greater than 320 Amps 26
Section 3.6.21 No Network or Three-Phase Class 320 Locations 26
Section 3.6.22 Three Phase Greater Than 200 Amp 27
Section 3.6.23 Combined Fuse/Meter Equipment 27
Section 3.6.25 Ground Rod Required 27
Section 3.6.26 Meter Pedestal On Same Lot As Customer Served 27
Section 3.6.27 Parking Area Protection 27

Section 3.6.28 Transformer-Meter Pedestal Clearance 27
Section 3.6.30 C.T. Pedestal Support 28
Section 3.6.31 Meter Socket Maintenance by Customers 28
Section 3.6.32 The District Will Perform Emergency Repair 28
SECTION 4: CURRENT TRANSFORMER INSTALLATIONS 29
Section 4.1 Ampacity Up to 800 Amps 29
Section 4.1.1 General 29
Section 4.1.2 Outdoor Installation 29
Section 4.1.3 C.T. Enclosure and Conduit by Customer 29
Section 4.1.4 District Instrument Transformers 29
Section 4.1.5 The C.T. Enclosure Sizes Required 30
Section 4.1.6 Cabinet Cover Size 30
Section 4.1.7 Cabinet Mounting Height 30
Section 4.1.8 No Meters on C.T. Enclosure Cover 30
Section 4.1.9 C.T. Enclosure Not a Conductor 30
Section 4.1.10 Enclosures Shall Be Grounded 30
Section 4.1.11 C.Ts Mounted On Service Poles 31
Section 4.1.12 Mast-mounted Current Transformers Shall Not Be Allowed 31
Section 4.1.13 Outdoor Installation Locations 31
Section 4.1.14 Metering Not On District Equipment 31
Section 4.2 Service Ampacity Larger Than 800 Amperes 31
Section 4.2.1 Switchgear C.T. 31
Section 4.2.2 Enclosures to Be Accessible 31
Section 4.2.3 C.Ts Readily Accessible 32
Section 4.2.4 Unmetered Conductor Compartments Sealed 32
Section 4.2.5 Meter Base and Test Switches 32
Section 4.3 Primary Voltage Meter Installations - Over 600 V 32
Section 4.3.1 Metering Location Approval 32
Section 4.3.2 District Provides, Installs, Maintains and Owns Metering and Associated Equipment 32
Section 4.3.3 Customer Provides Switches, etc. 32
Section 4.3.4 Customer's Wiring Connected by District 32

Section 4.3.5 Pole Mounted Primary Metering 32

SECTION 5: CUSTOMER WIRING AND INSTALLATION 33

Section 5.1 Notify District of New or Rewire Work 33

Section 5.2 Wiring Inspection 33

Section 5.3 Emergency Repairs After Hours, Weekends and Holidays 34

Section 5.4 Diversion of Service 34

Section 5.5 Contractor Access 34

Section 5.6 Grounded Neutral 34

Section 5.7 Communication Bonding 34

Section 5.8 Distribution Center Pole Metering 34

Section 5.9 Transfer Equipment 34

Section 5.10 Customer Generation 35

SECTION 6: MOTORS AND APPARATUS 36

Section 6.1 General 36

Section 6.2 Motor Characteristics 36

Section 6.3 Service Type Designation by District 36

Section 6.4 Special Motors 36

SECTION 7: PROTECTION AGAINST ABNORMAL CONDITIONS 37

Section 7.1 Under-voltage Protection 37

Section 7.2 Single-Phase Protection 37

Section 7.3 The District Will Not Be Responsible For Damage 37

Section 7.4 Uninterruptible Power Supply 37

SECTION 8: TRENCHING REQUIREMENTS 38

Section 8.1 General Cable Trench Requirements 38

Section 8.2 Root and Rock Restrictions 38

Section 8.3 Specification Drawings 38

Section 8.4 Water-Free Trench 38

Section 8.5 Access, Construction 39

Section 8.6 Sloping and Shoring 39

Section 8.7 Joint Use Of Trenches (See Drawing #30) 39

Section 8.7.1 Direct Buried Cable Separation 39

Section 8.7.2 Electric Cable In Conduit, No Separation Required 39

Section 8.7.3 Water and Sewer Lines 39

Section 8.8 Permanent Access 39
Section 8.9. Cable Pulled Into Continuous Conduit 40
Section 8.9.1 PVC Joints Must be Glued 40
Section 8.9.2 Maximum Number of Bends in Service Conduit 40
Section 8.9.3 Conduit Under Buildings 40
Section 8.10 Equipment Locations Permanent 41
Section 8.11 The Customer Shall Provide Final Grade 41
Section 8.12 Backfill Bedding Material 41
Section 8.13 Backfill Compaction 41
Section 8.14 Road Bores 42
Section 8.15 Requirements Before Construction 42
SECTION 9: AREA LIGHTS AND STREET LIGHTS 43
Section 9.1 General 43
Section 9.2 Maintenance by District 43
Section 9.3 Rates 43
Section 9.4 Served From Overhead Systems 43
Section 9.4.1 District Lights on District Poles 43
Section 9.5 Served From Underground System 43
Section 9.5.1 District Lights on District Poles 43
Section 9.5.2 Multiple Lights 44
SECTION 10: COMMUNICATION EQUIPMENT ON DISTRICT POLES 44
Section 10.1 Contact Approval Required 44
Section 10.2 District Riser Requirements 44
Section 10.3 Washington State Wiring Permit Required 44
Section 10.4 Dimension and Weight Limits 44
Section 10.5 Equipment Grounding as per NEC 44
Section 10.6 Clearances As Per NESC 44
Section 10.7 Voltage and Protection 44
Section 10.8 Battery Flame Protection 45
Section 10.9 Load Information Required (Wattage of Power Supply) 45
Section 10.10 Rates 45
Section 10.11 Transfer and Relocation 45
SECTION 11: CHARTS 46

CHART # 1 Non-Metallic PVC Direct-Buried Conduit 46

CHART # 2 Minimum Conduit Size Based on Maximum Fill Requirements, Triplexed and Quadruplexed Secondary Conductors 47

CHART # 3 Conductor Sizes and Types Allowed for District Service Wiring Installations 48

Residential Service Conductors 48

General power and Industrial 48

SECTION 12: DRAWINGS 49

SECTION 1: GENERAL RULES

SECTION 1.1 APPLICATION FOR SERVICE - CONTRACT

Electric service shall be provided upon written application, such application being a contract for service, subject to the Electric Service Regulations of the District. Rates shall be as detailed in the applicable Rate Schedule.

SECTION 1.2 COMPLIANCE WITH CODES

All Customer electrical equipment and wiring must be in accordance with the current edition of the National Electrical Code (NEC) at the time of installation. In addition, the Customer must comply with State, County and Municipal Codes.

SECTION 1.2.1 CONFLICT RESOLUTION

Any conflict between this policy and the NEC or other Codes shall be resolved by the Manager of the District.

SECTION 1.2.2 VARIANCES

When conditions exist that renders the application of any particular requirement to be impracticable or impossible, a variance may be granted. A variance will not be granted that is justified only by economics. Variances to these Electrical Service Requirements can only be issued by the Engineering Manager, with the concurrence of the Operations Superintendent responsible for the area the variance occurs.

SECTION 1.3 INSPECTION APPROVAL REQUIRED

No new service connection will be made unless Contractor's or Customer's electrical work permit is attached to the service entrance or service switch and approved by the proper electrical inspection authority, in accordance with RCW 19.28.210. and District Policy.

No increased, relocated or otherwise altered service will be reconnected unless Contractor's or Customer's electrical work permit is attached to the service entrance or service switch.

SECTION 1.4 SPACE AND PROTECTION PROVISION BY CUSTOMER

The Customer shall provide sufficient space and exercise proper care to protect District property on his/her premises. In the event of loss or damage to District property on the Customer's premises arising from neglect, carelessness, or misuse, the cost of necessary repairs or replacement will be billed to the Customer.

SECTION 1.4.1 SAFE ACCESS TO FACILITIES

The Customer shall keep the area around all meters, transformers, and other District facilities on the Customer's property free of vegetation, health and safety hazards, debris, and obstructions, to ensure clear and safe access at all times.

SECTION 1.5 VALID ADDRESS REQUIRED FOR SERVICE

Before a meter can be installed, the Customer must obtain a valid service address from the proper agency. Apartment unit or space numbers are considered part of the valid address. Certain exceptions may be approved by a District representative. Examples are services to highway lighting, signs or irrigation pumps.

SECTION 1.5.1 CLEAR PERMANENT METER MARKING

Each meter position and each service switch or breaker shall be clearly and permanently identified by the Customer to indicate the particular location supplied by it. Meters will not be installed nor service energized until marking is complete.

Examples of clear, permanent markings are:

1) An identification plate attached by screws or rivets

2) Commercially engraved tags with a raised relief surface

3) Waterproof paint applied with stencil

Clear identification means an apartment/store space letter or number, or street address/number. The store name may be included, however, it does not constitute a clear designation in itself.

Section 1.5.2 Owner Responsibility for Marking Meters

It is the responsibility of the Owner or Manager of multi-unit complexes to notify the District of any changes in unit or apartment numbering so that the District's personnel may verify metering circuits. Such notice must be given in writing to the District to permit re-designation of meters serving the premises. The Owner or Manager will be responsible for renumbering both the premises and meter sockets prior to dispatch of District personnel.

The Owner or Manager shall be present when the building is initially energized to verify that the proper service is energized as the District's connections are completed.

SECTION 1.6 LOAD BALANCE WITHIN 10 PERCENT

The Customer or his Contractor shall connect his equipment to keep the load, under normal operating conditions, balanced within plus or minus 10% of the average load across the phase wires.

SECTION 1.7 CUSTOMER EQUIPMENT ON DISTRICT POLES

No equipment, devices or wiring, other than service entrance equipment belonging to a customer, shall be attached to District-owned poles except by special permission from the District, and any such attachment shall be done strictly in accordance with District specifications.

SECTION 1.7.1 METER LOCATION AND REWIRING

Meter locations required for new service or customer rewire work will conform to this policy even if other existing meters on the premise may not conform. Rewiring work shall include the upgrading of Customer metering equipment and requires that all new or modified equipment be installed and located in accordance with the requirements of these Electric Service Requirements. Rewiring work, as used in this section and other sections, does not apply to maintenance repairs and/or replacement of defective customer equipment with the same or similar equipment.

SECTION 1.7.2 COST OF RELOCATION

When any changes, alterations, or additions are made on the Customer's premises that violate these requirements, the Customer shall pay the cost of relocating District facilities.

SECTION 1.7.3 FAILURE TO COMPLY WITH REQUIREMENTS AND ACCESS POLICY

Failure to comply with the current District Electrical Service Requirements, Regulations or Facility Access Policy may result in refusal to connect a service or disconnection of an existing service.

SECTION 1.8 ENERGIZING SERVICE

Except where isolated by an open main service disconnect, the property owner or their representative shall be present at the time of connect or reconnect, or shall indicate in writing that their presence is not required and that all customer equipment is in a satisfactory state or condition to be energized. This requirement may be waived at the discretion of the District when reconnecting a service under the same active account and account holder within 96 hours of a disconnect.

SECTION 2: SERVICE WIRING

SECTION 2.1 GENERAL

SECTION 2.1.1 AVAILABILITY OF SERVICE

The availability of service for the equipment to be used shall be determined from the District before proceeding with the wiring or the installation of equipment.

SECTION 2.1.2 PHASE AND VOLTAGE TO BE SUPPLIED

The District will advise the Customer of, and supply him with, the most suitable phase and voltage available upon established circuits. Three-phase, 3-wire services are not allowed by the District.

SECTION 2.1.3 FAULT CURRENT

The District will advise the Customer of available fault current either at the transformer or the metering point. It will be the Customer's responsibility to provide service equipment rated for the available fault current. In no case shall Customer utilize "cable protectors" ahead of the meter to limit fault duty.

SECTION 2.1.4 SERVICE REFUSAL

The District reserves the right to refuse to connect, or render service to, any applicant or any Customer where such connection and/or where the applicant or Customer has not complied with State, Municipal or District regulations concerning the rendition of service.

SECTION 2.1.5 ACCESS TO PREMISES FOR MAINTENANCE

The District shall have the right, through its agents or employees, to safely enter the property of the Customer at all times for the purpose of reading, inspecting, repairing, or removing metering devices, appliances, and wiring of the District, trimming or removing trees and brush around meters, transformers, or other equipment that may interfere with the safe and efficient operation of the utility system, maintenance of utility lines, both overhead and underground, and inspection, replacement, installation and removal of District facilities.

SECTION 2.1.6 PROTECTIVE DEVICES

Suitable protective devices on the Customer's premises may be required whenever the District deems such installation necessary to protect its property or that of its other Customers. See Drawing #35 regarding guard posts for padmount equipment.

SECTION 2.1.7 CONDUCTOR COMMON LEGS MARKED

All service conductors provided by the Customer will be marked by the Customer or Contractor with colored tape to identify common legs of the service at the point of connection to District facilities. (See Drawings #21, 22, 23, 25, 26, 27 & 28).

SECTION 2.1.8 OVERHEAD SERVICE BY DISTRICT

Overhead service drops will be run by the District and attached to a connection point acceptable to the District, provided by the Customer, on the Customer's facility. (See Drawings #1, 2, 3, & 4). The point of demarcation is the connections between the District service wire and the Customer's service wire on self-contained metering and building mounted C.T. enclosures. In the case of metering on a District pole, the District will run the drop to the pole and connect to the Customer's wiring thereon. The point of demarcation is the connections between the District service wire and the Customer's service wire, near the weatherhead on self-contained metering installations and at the current transformer(s) on pole top C.T. metered installations. (See drawings #7 & 8)

SECTION 2.1.9 UNDERGROUND SERVICE CABLE IN CONDUIT BY CUSTOMER

The Customer will install underground service conductors in conduit, 2" minimum diameter between District facilities and the point of metering in accordance with specifications contained in these Requirements. Service conductors shall not be installed until a continuous conduit run has been installed from the metering point into the pad mount transformer or secondary enclosure and approved by a PUD Representative. Service conductors may be installed on services that are fed from a PUD pole if the first 10' of schedule 80 conduit has been attached to a standoff bracket on pole. (See Chart #2)

SECTION 2.2 SERVICE SUPPLY CONDUCTORS - OVERHEAD

SECTION 2.2.1 DISTRICT-PROVIDED SERVICE POLES

The District will furnish and install service poles where they are required. Payment for service poles shall be as determined in Section 3--Line Extension Regulations of the Electric Service Regulations.

SECTION 2.2.3 ATTACHMENT VERTICAL CLEARANCE

Service drop clearances shall comply with appropriate requirements of the Washington Administrative Code (WAC), National Electrical Safety Code (NESC), and the NEC. Service drop conductors shall not be readily accessible to physical contact. Changes, additions, and/or grading on Customer premises shall not cause clearances under and around service wires to be less than indicated herein. District shall be advised when clearance problems exist. In some cases, Customer may be responsible for costs incurred to restore clearances. Improper clearance is reason for disconnection of service. (See Drawings #4 & 5).

SECTION 2.2.4 SERVICE CONDUCTOR CLEARANCES ABOVE A ROOF

The point of service attachment on the building shall be such that both the attachment and the lowest point of the drip loop will be at least 10' above finish

grade. The attachment must be high enough to allow 15' of conductor clearance over driveways, and the point of contact should be within 2' of the weatherhead. Where necessary, approved structures to support service conductors and for reinforcement of a building structure to provide adequate anchorage for service drop, conductors shall be provided by Contractor or Customer. (See Drawings #2, 4, and 5). Conductors shall have a vertical clearance as appropriate for pedestrian and vehicular traffic on roofs as shown on Drawings #4 and 5 herein.

Exception No. 1: Where the voltage between conductors does not exceed 300 and the roof has a slope of not less than 4" in 12", a reduction in clearance to 3' shall be permitted.

Exception No. 2: Where the voltage between conductors does not exceed 300, a reduction in clearance above only the overhanging portion of the roof to not less than 18" shall be permitted if:

(1) Not more than 4' of service-drop conductors pass above the roof overhang, ***and***

(2) They are terminated at a through-the-roof raceway or approved support.

SECTION 2.2.5 SERVICE CONDUCTOR CLEARANCE ABOVE GROUND

Service drop conductors, where not in excess of 600 V nominal, shall have minimum clearance from final grade as shown on Drawing #4.

SECTION 2.2.6 SERVICE CONDUCTOR CLEARANCES FROM OPENINGS

Service conductors shall not be installed beneath openings through which materials may be moved, such as openings in farm and general power buildings. Overhead wires shall not be run such that they obstruct entrance to these building openings.

SECTION 2.2.7 SERVICE DROP ATTACHMENT

The service entrance must be located where there is adequate material and strength for the District to attach its service drop. The attachment must have sufficient height to provide the required service drop and drip-loop clearances as specified herein. The attachment point must be accessible by ladder.

Preferred points of attachment are building studs or solid masonry at least 1' from a corner. Some trim and soffit boards are acceptable when substantially reinforced. Weatherhead attachments are acceptable provided adequate clearance from the roof is maintained.

Where a mast is over 26" tall or the service attached to it is over 100' long, the mast shall be guyed. (See Drawings #2 & 3 for details).

SECTION 2.2.8 LOW BUILDING PROVISION

When the building is too low to obtain proper clearance for the service wire attachment, Customer must provide an approved upright or service mast of rigid metal conduit of sufficient strength and height for the attachment of the service drop wires. Minimum acceptable mast shall be 2" galvanized steel conduit. (See Drawings #2 & 3).

SECTION 2.2.9 MULTIPLE SERVICE ENTRANCE-SPACING

When more than one service entrance is provided on a building, the spacing between the service entrances should not exceed 24" without special permission. Consideration for exceptions would include:

- Fire pumps where separate service is required
- Emergency required standby
- Multiple occupancy buildings with limited space for service entrance
- Capacity requirements in excess of 2000 ampere per service
- Large Area Buildings
- Different electrical characteristics (phase, voltage, phase, etc.)

SECTION 2.2.10 SERVICE ENTRANCE CLEARANCE FROM ADJOINING PROPERTY

Thirty-six inches is required as the minimum permissible clearance between the front of metering equipment and/or meter and the adjacent property line.

SECTION 2.2.11 REWIRING EXISTING SERVICE ENTRANCE

The service entrance from an existing supply bus on a building may be changed or increased in capacity at its present location if it is in compliance with existing District Requirements.

SECTION 2.3 UNDERGROUND SERVICE SUPPLIED BY CUSTOMER

The Customer shall provide and install service cable and conduit in a trench also provided by the Customer. See Section 8 for trench requirements.

SECTION 2.3.1 UNDERGROUND SERVICE CABLE "TAILS" BY CUSTOMER

Service cables shall be provided by the Customer in lengths adequate to extend up the pole to the secondary or the transformer terminals (including street crossings). (See Drawing #6). For padmount transformers or pedestal sources, sufficient tails shall be left to reach the appropriate connectors. (See Drawings #31, 32, & 33).

SECTION 2.3.2 LATERAL NOT ENCLOSED

Service entrance provided from underground distribution systems shall be located and terminated in accordance with District design standards. The service lateral shall not be enclosed within or covered by any alteration, facade, or addition to the building. The meter conduit risers may be located within footing, foundation and wall of the exterior wall of any building that is constructed with a flush-mounted

meter base.

SECTION 2.3.3 CABLES RATED FOR SERVICE ENVIRONMENT

Cables to be installed in conduit or buried in direct contact with the earth shall be a type designated by the Washington State Department of Labor and Industries or NEC for the application (e.g. direct buried in dirt, in conduit, exposed to UV).

SECTION 2.3.4 DISTRICT STANDARDS FOR CABLE SIZES AND TYPES, NUMBER OF RUNS AND CONDUIT SIZES

See Section 11, Charts 1, 2 and 3.

SECTION 2.3.5 CABLE CONNECTION BY DISTRICT AT DISTRICT FACILITY

Underground service runs provided and installed by the Customer or Contractor will be connected by the District, to District provided facilities. For all conductor sizes larger than 350 MCM, the customer or the customer's contractor will furnish the District with 2-hole NEMA spades, 1-¾" in width for each conductor to be terminated at the District's transformer. (or as directed by District Rep)

SECTION 2.3.6 CABLE CONNECTION BY CUSTOMER AT SERVICE

The Customer or Contractor will connect service cables at the point of metering.

SECTION 2.3.7 MAINTENANCE OF UNDERGROUND SERVICES

A) Residential Service Maintained by District

The District will maintain all underground **residential** services, installed to District specifications, up to the point of metering after a one-year warranty period. After the District accepts the installation, and after a one-year warranty period, the District will be responsible for the service up to, but not including, the meter base lugs on self-contained meter installations and at the current transformer on C.T metering installations.

Whenever a Customer requests changes to the service that affect the maintenance responsibility, the Customer will be so advised.

B) Apartments and Condominiums

The underground service or services to any multi-unit residential structure or structures containing more than 4 individually metered dwelling units, owned and operated as a single general power entity, shall not be classified as **residential** with respect to the requirements of this section.

C) General Power and Industrial Services Maintained by Customer

All underground services to **general power** or **industrial** customers will be maintained by the customer or the customer's contractor at the customer's

expense. The District will assist, by request, in the maintenance by providing available resources at the customer's expense.

SECTION 2.3.8 TRENCH INSPECTION BY DISTRICT

Residential service conduit on the source side of metering must be inspected and approved by a District representative after installation in the trench, but prior to backfill. (See Drawings #30, 31, and 32 for details).

SECTION 2.3.9 SPLICES NOT ALLOWED

Splices are not accepted on new residential cable installations on the source side of metering.

SECTION 2.3.10 RESIDENTIAL SERVICE CABLE BURIAL DEPTH

Underground **residential** service to the point of metering shall be installed at a depth of 42". Where solid rock or obstructions prevent compliance with this depth requirement, reduction in depth and associated additional protective requirements shall be determined by a District representative. (See Drawing #30)

SECTION 2.3.11 RISER CONDUITS BY CUSTOMER

All pole risers shall be installed on poles utilizing standoff brackets as indicated on Drawings #6, 7, and #8. The Customer or electrician shall attach only the first

10' section and the District will complete the installation. The Customer or electrician shall provide the remainder of the material and conductor to complete the installation as shown. If a conduit riser exists on a pole, the new riser must be installed using existing standoff brackets and mounted adjacent to the existing conduit.

Riser pole conduit shall be rigid galvanized metallic conduit or schedule 80 PVC for the lowest 10' section. Conduit above the lowest 10' section may be schedule 40 PVC. Nonmetallic conduit must be UV resistant.

Riser conduit on a building ahead of the meter base shall be rigid galvanized metallic or schedule 80 PVC. (See Drawing #11).

SECTION 2.3.12 NO LB FITTINGS IN SERVICE CONDUIT

Conduit installations for cables shall not include conduit elbow fittings (LB). Standard conduit bends must be used. Bend radius should be 24" or larger. Conduit elbow fittings (LB) shall not be used ahead of metering. (See sweep specifications, Chart #1.)

SECTION 2.3.13 THE RISER BEND

The Riser Bend shall be provided and installed by Customer between the continuous conduit and the pole riser. The bend shall be PVC Schedule 40 or

Schedule 80, rigid non-metallic electrical conduit. The bend shall be installed at the time of conduit installation. The District will extend conduit up pole. The proper location of the Riser Bend on the pole (quadrant) shall be obtained from District representative. Where the Riser Bend is to be extended to a location requiring pole setting, replacement, or alteration by the District, such extension shall not be made until the pole work is completed by the District.

SECTION 2.3.14 CONDUITS INTO EXISTING TRANSFORMERS

Conduit into existing transformers or secondary pedestals is to be installed by the District. The Customer or Contractor shall install conduits for new general power or industrial installations into the secondary area of the transformer site prior to the new transformer installation.

SECTION 2.3.15 CONDUIT SEALING FOR BELOW-GRADE LOCATIONS

Termination of secondary distribution conduits within the building below grade is not a preferred installation due to water seepage problems. It has proven to be very difficult to insure long-term water tightness of the conduit and cables through the building wall. It is the Customer's responsibility to provide drainage and sealing as needed to prevent damage to the electrical facilities and other property inside the building.

SECTION 3: METERING

SECTION 3.1 GENERAL

SECTION 3.1.1 ONE MAIN METER FOR SERVICE OF SAME TYPE

The District will furnish and install only one main watt-hour meter to register all energy of the same type of service supplied to Customer at any individual premises, unless accuracy of measurement, engineering, safety reasons, rates, or legal provisions require the installation of more than one meter except as provided for in Section 3.1.6 below. There may be Customer expense for additional requested meters.

SECTION 3.1.2 CUSTOMER PROVIDES METER MOUNTING EQUIPMENT

The Customer is required to purchase, install and maintain appropriate meter-mounting equipment in accordance with the requirements of the latest edition of these Requirements.

SECTION 3.1.3 METER MOUNTING EQUIPMENT DEFINED

Meter-mounting equipment includes meter sockets, pedestal supports with concrete pad as required, current transformer cabinet, switchgear, landing pads, weatherhead, conductors, conduits, and supports as appropriate for the service. See Section 3.6 for additional details.

SECTION 3.1.4 SERIES METERING NOT ALLOWED

Meter shall be located to directly measure Customer load. Series (subtractive) metering will not be allowed unless specifically approved by the District.

SECTION 3.1.5 FAILURE TO INSTALL METER-MOUNTING EQUIPMENT

Failure to install meter-mounting equipment by Customer/Contractor meeting these requirements may lead to the delay of service until these requirements are met.

SECTION 3.1.6 INDIVIDUAL METERS REQUIRED

The District requires the installation of individual electric meters on all units in multi-occupancy residential and general power buildings and mobile home parks.

SECTION 3.1.7 ADDING NEW METERS TO EXISTING SERVICE

New meters may be added to the existing service subject to the ampacity limitations of the service entrance conductors or service equipment. If the added loads served from the new meters require rewiring, then all (new and existing) meters shall be located in accordance with the District's current meter location policy.

SECTION 3.1.8 DEMAND METERING

Demand metering shall be installed on services in accordance with current District Rate Schedules and on all reactive metered accounts.

SECTION 3.1.9 REACTIVE METERING

Reactive metering shall also be installed on motor loads exceeding 50 horsepower or when the District determines the power factor of the load would be less than 95 percent lagging.

SECTION 3.1.10 CUSTOMER MONITORING

For customers who request to monitor and/or control energy use or demand, the District shall provide meter K, Y, and Z pulse signals as available via a District owned and operated optical isolator relay. Customer monitoring will be provided on a cost basis.

SECTION 3.1.11 GROUNDING OF METERING EQUIPMENT

All metering equipment shall be bonded to ground rods installed at the location.

SECTION 3.2 METER LOCATIONS

SECTION 3.2.1 GENERAL

In general, all electric meters must be located outdoors at the point closest to the service drop or lateral termination except as defined below. This policy applies to all new installations and rewire work where the meter and/or service equipment is involved. All meters shall be located and mounted in devices in accordance with the requirements of this manual, and acceptable to the District.

Meters shall not be enclosed or the installation modified in such a way so as to impede safe and convenient access to the meter and associated equipment. Nothing shall hinder or prevent the inspection, removal or installation of meters and other metering equipment, meter rings, meter seals or other locking devices.

SECTION 3.2.2 LOCATION OF DISTRICT FACILITIES

The District shall determine the location of the remote metering pedestal, service entrance, service pole, or other metering equipment prior to installation. Customers who install wiring or equipment without an approved location from a District Representative shall be at risk of having to change the service location to conform to the requirements of the District. This requirement applies to all new installations and future modifications or repair work where the meter and/or service equipment is involved.

SECTION 3.2.3 LOCATION NOT AT REAR OF RESIDENCE

Residential meters may be located remotely or attached to the residence as shown on Drawing #12. Meters shall not be located at the rear of houses or buildings without pre-approval from a District Representative and safe and unrestricted access is provided at all times from an alley or street along the property line directly behind or on either side of the house or building. (See Electrical Requirements Drawing - #12)

SECTION 3.2.4 METER ON OUTSIDE BUILDING LINE

Installation of meters on buildings shall be on the outside lines of the building and shall be grouped in such a manner that a single service drop may serve all meters.

SECTION 3.2.5 METERS SHALL NOT BE ENCLOSED

Meters shall not be enclosed in garages, carports, breezeways, porches, or such locations where subsequent additions, rewiring, or remodeling could enclose the meter.

SECTION 3.2.6 METERS SHALL BE GROUPED

Individual meters associated with a single structure or facility shall be grouped at locations approved by the appropriate District representative. The number of meter centers in an apartment building shall not exceed 1 for 3 floors without District approval.

SECTION 3.2.7 SAFE METER LOCATION REQUIRED

The Customer shall furnish a location to install the metering equipment that is acceptable to the District, not subject to excessive grade, and that will provide long-term, safe access to District employees, be free from vibration, corrosive atmosphere, abnormal temperatures, dust, water, etc.

SECTION 3.2.8 METERS SHALL BE READILY REMOVABLE

All meters shall be readily removable (i.e.: not plastered in or built in). The surface of the meter base shall not be recessed behind the exterior wall surface. A meter installed in any alley or driveway must be flush mounted on the wall and protected adequately to prevent damage from vehicular traffic. See Drawing #2.

SECTION 3.2.12 MANUFACTURED AND MOBILE HOME SERVICE LOCATION

The National Electrical Code distinguishes between Mobile homes and Manufactured homes for the purpose of service equipment (NEC 550-32).

SECTION 3.3 MOUNTING HEIGHTS AND CLEARANCES

SECTION 3.3.1 DRAWINGS

Meter mounting heights and clearances are shown on Drawings #7, 8, 10, 11, 13, 14, 15, 16, 17, 24, 25, 26 and 27.

SECTION 3.3.2 GENERAL

The Customer shall maintain clear access to and clearance in front of meters and metering equipment for District employees at all times for readings, testing, changing, removing, inspecting and servicing such equipment. The clear space in front of the meter equipment shall be a minimum of 36" deep, and as wide as the equipment or 36", whichever is greater; and to a minimum height of 6’-6” or the top of the equipment, if greater.

All meters shall be surface or flush mounted and not recessed. A minimum side and overhead clearance of 18" shall be maintained from the center of the meter opening, or any of the openings contained in a multiple meter socket.

Clearance, clear access, and working space shall be free of obstructions such as: piping, ventilating ducts, tanks, steps, rubbish, storage shelves, drums, pumps, air conditioning equipment, decks, chimneys, down spouts, building projections, and other equipment.

SECTION 3.3.3 SINGLE SOCKET METERS

Except as otherwise stipulated by the District, individual meter sockets shall be mounted such that the center of the meter opening is between 5'-0" and 6'-0" above grade. (See drawings 4, 5, 7, 8 and 11)

SECTION 3.3.4 SINGLE METER PEDESTALS

Underground supplied individual meter pedestals shall be mounted such that the center of the meter opening is between 3’-0” and 4’-0” above grade. (See Drawings #14, 15, 16, and 17). Each meter pedestal shall be fed independently from District facilities.

SECTION 3.3.5 MULTIPLE METER SOCKETS

Multiple meter sockets shall be arranged so that the minimum vertical distance between meter openings is 10" and the minimum horizontal distance is 8". Vertically grouped multiple meters shall be installed such that the top meter(s) are not more than 6'-0" from center of the meter opening to grade, nor the bottom meter(s) less than 3'-0" from center of meter opening to grade. (See Drawing #24).

SECTION 3.3.6 C.T. METERS MOUNTING HEIGHT

Current transformer rated test switches, phase shifting transformers, and recorders shall not be less than 36" above finished grade or floor immediately below the socket with the reference point the bottom of the device in question.

SECTION 3.3.7 PROTECT METERS FROM HAZARDS

Meter sockets and enclosures shall not be elevated to avoid hazards but must be protected from pedestrian and vehicular traffic or parking hazards by Customer. (See Drawing #35 regarding guard posts).

SECTION 3.3.8 METERS MORE THAN 6' ABOVE GRADE

If, as a result of an action of the Customer that causes the meter to become more than 6' above grade and in the opinion of the District it is feasible and preferable to lower the metering equipment to a location between 5' and 6' above grade, the metering equipment shall be lowered at the Customer's expense. With approval of a District representative, a permanent meter access platform and steps with a skid-free surface may be installed by the Customer that meets or exceeds the current local Uniform Building Code (UBC). Installation and maintenance will be at the Customer's expense. After construction, the center of the meter must be between 5' and 6' above the surface of the platform as shown on Drawing #13.

SECTION 3.3.9 PLATFORMS FOR FLOOD AREAS

In flood areas, the bottom of the meter device must be raised a minimum of 3' above the highest water line on record. If necessary to raise a meter more than 6' above grade, a permanent platform and steps with a skid-free surface shall be installed by the Customer that meets or exceeds the current local UBC and maintained at the Customer's expense. A platform constructed 3' or more above grade must have a secure handrail installed on the steps and platform that meets or exceeds the local UBC. After the platform is constructed, the center of the meter must be between 5' and 6' above the platform surface. A District Representative must be consulted for approval prior to construction. (See Electrical Service Requirements - Drawing # 13)

SECTION 3.4 ACCESS TO METER EQUIPMENT

SECTION 3.4.1 METERS NOT ENCLOSED

Meters shall not be enclosed or the installation modified in such a way so as to impede safe and convenient access to the meter and associated equipment. Nothing shall hinder or prevent the inspection, removal or installation of meters and other metering equipment, meter rings, meter seals or other locking devices.

SECTION 3.4.2 PATHS TO METERS CLEAR

All pathways providing access to any meter shall be a minimum of 3' in width and shall be kept clear of all obstacles and safety hazards, including, but not limited to, landscaping, brush, debris, obstructions, holes, aggressive or dangerous animals, etc.

SECTION 3.4.3 WALKWAY OVER OPEN DITCH

Any pathway on the Customer's property that encounters an open ditch of any type over 2' wide shall have a flat, solid, and structurally stable walkway, 2' wide with a skid-free surface spanning the entire width of the ditch. All walkways over open ditches must provide a minimum of 1' clearance above any water or hazard in the ditch and must not sag more than 1" the entire length of the walkway when subjected to a weight of 300 pounds per square foot.

SECTION 3.4.4 WALKWAY WITH HANDRAIL OVER OPEN DITCH

Any walkway on the Customer's property constructed over an open ditch with a width and depth of 3' or more shall have a structurally sound handrail along the entire length of the walkway that will not flex more than 1/2" when subjected to a side load of 40 pounds per square foot along the entire length of the handrail.

Working space provisions of the NEC, the current issue, shall be adhered to at the time of installation.

SECTION 3.5 SECURITY REQUIREMENTS

SECTION 3.5.1 METERED AND UNMETERED CONDUCTORS, SAME WIREWAY

Metered and unmetered conductors shall not be installed in the same wireways, pull box, enclosure, etc., except for the conductors being metered from the terminal point to the point of exit at metering enclosures.

SECTION 3.5.2 SEALING PROVISIONS OF SERVICE EQUIPMENT

Adequate provisions must be made for the sealing and security of meter, unmetered service equipment, and circuits. Covers and provisions for sealing of all unmetered service equipment, pull boxes, troughs, wireways, busways, etc., shall be provided by the Customer. Unmetered disconnects shall be sealed by the District and accessed only by the District and the Fire Department. Breakers and fuses will not be allowed in unmetered circuits except for flat rate service as specified elsewhere.

SECTION 3.5.3 SINGLE SEALING HASP FOR COVERS

All meter base covers shall be equipped with 1 or more securely fastened hasp or stud for padlocking and sealing by the District. Depending on the cover size, non-sealable fasteners may be used to mechanically secure the cover in addition to the single sealing hasp. Covers that secure more than 1 meter shall not be allowed by the District.

SECTION 3.5.4 UNUSED HUBS OR OPENINGS CLOSED

Unused hubs or openings shall not be left open. Hubs shall be closed with a blank hub and knockouts with knockout closures, locked in place from the inside. Open, unused breakout, or knockout in meter sockets shall not be allowed.

SECTION 3.5.5 WATERTIGHT METER EQUIPMENT

Raceway or conduit connections at top of meter device shall be watertight and the bottom knockouts closed as detailed in Section 3.5.4.

SECTION 3.6 CUSTOMER FURNISHED METER-MOUNTING EQUIPMENT

SECTION 3.6.1 SOCKET FORMS ALLOWED

Socket forms allowed or arrangements to provide correct metering for the various systems used in the District are illustrated in Drawing #18.

SECTION 3.6.2 LINE-SIDE INSTALLATION OF METER SOCKETS

Individual meter sockets shall be installed on the line side, ahead of Customer service equipment except as provided for elsewhere.

SECTION 3.6.3 METERS TO BE TOP CONNECTED

The supply conductors to a self-contained socket shall be connected to the top terminals, and the load supply conductors shall be connected to the bottom terminals. (See Drawings #19, 20, 21, 22, and 23).

SECTION 3.6.4 CABLE LUGS RATED FOR CONDUCTOR

Customer/Contractor shall provide appropriate cable lugs for the termination of District-maintained conductors. When aluminum conductors are used, the meter socket must be listed or approved and clearly marked by the manufacturer that it is acceptable for aluminum conductor.

SECTION 3.6.5 OXIDE INHIBITOR USED ON ALUMINUM CONDUCTOR

When aluminum service entrance conductors are used in the meter device, the wire should be thoroughly cleaned with a wire brush and then liberally coated with oxide inhibitor.

SECTION 3.6.6 METER BASE BONDING

The neutral service conductor may be bonded to the meter base using the grounding screw or bonding terminal. The neutral service conductor may be continuous from the weatherhead to the switch box. (See Drawing #20).

SECTION 3.6.7 AUTOMATIC CIRCUIT CLOSING DEVICES

Automatic circuit closing devices are not permitted in meter sockets.

SECTION 3.6.8 SURFACE MOUNTING OF METER SOCKETS

All meter socket equipment shall be surface mounted or flush mounted, not recessed.

SECTION 3.6.9 METER SOCKET COVER RETAINING RINGS

Meter socket covers may be ringless or ring type. Meter retaining rings shall be screw type. Other types are not acceptable.

SECTION 3.6.10 PLUMB AND RIGID MOUNTING

Meter socket mounting must be plumb and rigidly supported to prevent movement, sway and vibration and able to withstand forces of the installation or removal of the meter. Meter sockets not mounted to a permanent structure must be supported in a manner approved by the District. Refer to Section 3.6.29 and Drawings #14, 15, 16, 17, and 26 for a preferred meter socket support.

SECTION 3.6.11 BOLT-IN METERS

Bolt-in-meter bases, such as the Duncan 400, will not be allowed on any new service.

SECTION 3.6.12 CIRCULAR CAST OR DRAWN SOCKETS

Circular cast or drawn sockets may be used for temporary services only. (See Drawings #9 and #10 for Temporary Services).

SECTION 3.6.13 FIVE-TERMINAL SOCKETS ARE REQUIRED FOR 120/208

Five-terminal sockets are required for 120/208-volt single-phase services rated up to 200 amperes. The fifth terminal shall be at the nine o'clock position. A #10 AWG wire from the neutral grounded conductor shall be connected to the fifth terminal. (See Drawing #18, socket type "B").

SECTION 3.6.14 BOX OR TROUGH SOCKETS

Box or trough sockets may be used in place of circular cast or drawn sockets and are required on 120/208 Volt, 3-wire and 3-phase services. This type of socket shall be limited to self-contained installations with service entrance conductors that do not exceed #2 AWG copper or #1/0 aluminum and the NEC current rating does not

exceed 100 amperes. This type of socket shall also be used for instrument meter services but shall be a minimum of 4" deep. The exterior face of the meter base shall not be recessed behind the exterior wall surface.

SECTION 3.6.15 SEVEN-TERMINAL METER SOCKET

Up to 200 ampere 3-phase services require a self-contained 7-terminal Lever-Bypass socket unless the source transformer does not serve, nor is intended to serve, other loads. The neutral tap must be connected to the terminal second from the right on the bottom or load side. The socket shall include a grounding electrode bonding clamp. (See Drawing #21).

SECTION 3.6.16 HIGH LEG CONNECTION

The high voltage-to-ground phase conductor of a 4-wire, delta, 3-phase service, shall always be connected to the right-hand terminal, top and bottom. (See Drawing # 21).

SECTION 3.6.17 RESIDENTIAL SINGLE PHASE, 400 AMPS OR LESS

Residential single-phase services rated 400 amperes or less, shall be self-contained metering.

SECTION 3.6.18 BYPASS METER BASES

Lever and block or shunt type bypasses will be allowed and encouraged for all self-contained meter installations. Automatic bypasses are not allowed. See Section 3.6.7.

SECTION 3.6.19 SINGLE-PHASE GREATER THAN 400 AMP

Six-terminal sockets with room for test switches are required for single-phase services rated above 400 amperes (two current transformers located in C.T. enclosure). (See Drawings #25 and 26).

SECTION 3.6.20 SINGLE-PHASE GENERAL POWER OR INDUSTRIAL SERVICES GREATER THAN 320 AMPS

Single-phase general power or industrial services rated over 320 amperes shall be CT metered.

SECTION 3.6.21 NO NETWORK OR THREE-PHASE CLASS 320 LOCATIONS

Class 320-meter sockets shall **not** be permitted on any network (120-208 single Phase) or 3-phase meter installations. Class 320 single-phase sockets are not permitted on non-residential service of more than 320-amp rating unless approved by WA State Electrical Inspector.

SECTION 3.6.22 THREE PHASE GREATER THAN 200 AMP

Above 200 ampere 3-phase requires one 13-terminal meter base with room for test switch. (See Drawings #27 and 28).

SECTION 3.6.23 COMBINED FUSE/METER EQUIPMENT

Where Customer disconnects and/or fuses are combined with the meter equipment, the cover for the meter and the cover for Customer access to the switch/fuse and load side wiring shall be separated such that District meter and line-side service compartments may be secured and sealed separately from Customer side. On such combination units, internal barriers shall be permanently installed to prevent access to meters and unmetered wiring via Customer compartments. On multi-meter equipment, the line-side cable terminal compartments shall have sealable and lockable covers separate from meter covers.

SECTION 3.6.25 GROUND ROD REQUIRED

Every pedestal-mounted meter shall have at least one ground rod at the meter location with a minimum #6 copper ground wire connecting the ground rod(s) to the meter base. Two ground rods are required at the service panel location. (See Drawings #14, 15, 16, & 17).

SECTION 3.6.26 METER PEDESTAL ON SAME LOT AS CUSTOMER SERVED

When a remote meter pedestal is utilized, it shall be located on the same lot as the Customer being served.

SECTION 3.6.27 PARKING AREA PROTECTION

When a meter pedestal is located in a parking area, it must be so located that parked vehicles will not restrict meter accessibility nor meter pedestal be damaged by vehicular traffic.

SECTION 3.6.28 TRANSFORMER-METER PEDESTAL CLEARANCE

The meter pedestal shall not be closer than 5' to the side or 10’ from the front of a padmount transformer without prior approval of the District. (See Drawings #14, 15, 16, & 17).

SECTION 3.6.29 METER PEDESTAL SUPPORT

1. An assembled meter pedestal, which is composed of a meter socket and conduit or raceways, must be secured in a minimum 36”x 36”x 4” concrete slab. (See Drawings #14, 16, and 17) and supported by any one of the following:
    a. A single 1"x 4” galvanized steel channel
    b. Two pieces of heavy duty, 1-5/8" x 1-5/8" galvanized, uni-strut.
    c. Two pieces of 2" galvanized rigid conduit.
    d. Two pieces of 2" x 2" galvanized angle iron.

2. A one-piece, metal sleeve mobile home base assembly must be set a minimum of 2 feet in the ground and secured in a minimum 36”x36”x4” concrete slab (see Drawing #15).

The customer is responsible for maintaining the pedestal in plumb (vertical) position and to fulfill all other maintenance requirements. (See Section 3.6. 32)

SECTION 3.6.30 C.T. PEDESTAL SUPPORT

1. An assembled C.T. pedestal, which is composed of a C.T. can, meter socket and conduit or raceways, must be secured in a minimum 48” x 36” x 4” concrete slab. (See Drawing #26) and supported by any one of the following:
   - **a.** Two pieces of heavy duty, 1-5/8”x 1-5/8” back to back, galvanized uni-strut.
   - **b.** Two pieces of 2’ galvanized rigid conduit.

The Customer is responsible for maintaining the C.T. pedestal in plumb (vertical) position and to fulfill all other maintenance requirements. (See Section 3.6.32)

SECTION 3.6.31 METER SOCKET MAINTENANCE BY CUSTOMERS

It is the responsibility of Customer/Building Owner to maintain, repair, and replace the meter mounting (socket) equipment in order to keep such equipment in a safe, secure, and useable condition. This shall include any and all maintenance that is discovered by the District during authorized activities including, but not limited to, meter testing, meter maintenance, meter change-out, meter disconnect or connect. When such equipment is subject to vandalism or damage, it is the responsibility of Customer/Building Owner to remedy the situation by protective measures or by changing meter location.

SECTION 3.6.32 THE DISTRICT WILL PERFORM EMERGENCY REPAIR

The District will perform emergency repair in an attempt to maintain or restore service and to protect the public safety. In the event that the hazard posed by the equipment is critical to safe operation, immediate disconnection of service may be necessary until corrections are made by the Customer/Building Owner. The District will notify Customer/Building Owner and the Inspection Authority when an unsafe meter socket and/or service equipment problem is found. The District will allow a reasonable time, normally not to exceed 30 days, for the repair or replacement of meter socket equipment, subject to the hazard involved. The District emphasizes the need for the responsible Building Owner to minimize safety hazards to all concerned by maintaining meter socket equipment and service compartments in a safe and good working order.

SECTION 4: CURRENT TRANSFORMER INSTALLATIONS

Current transformers (C.T.s) shall be furnished, installed, and owned by the District. Contractor installed 1" diameter rigid galvanized or 1" SCD 40 rigid PVC conduit shall extend from the meter base to the approved instrument transformer enclosure located at a distance not to exceed 50 feet. For distances greater than 50 feet, contact the District. No conduit outlet bodies or other non-sealable fixture shall be allowed between the C.T. enclosure and meter base. Metering connections shall be made by the District. The Contractor shall identify and tag all conductors indicating common phase and whether they are source and load.

SECTION 4.1 AMPACITY UP TO 800 AMPS

SECTION 4.1.1 GENERAL

District C.T.s shall be mounted in Customer provided, owned, installed and maintained enclosure, compartment, box, or as part of panel boards as specified herein. The C.T. enclosure, compartment, box, etc., is dedicated for metering purposes only. Unauthorized access is not permitted. No Customer equipment or other wiring shall be allowed in or to pass through the dedicated space. C.T.s shall normally be installed on the source-side of the service disconnect - unless otherwise authorized by variance process.

SECTION 4.1.2 OUTDOOR INSTALLATION

All C.T. installations rated at 800 amps or less-shall be mounted outdoors and shall be installed in weather tight approved cabinets, except C.T.'s mounted on poles (See Section 4.1.11). In some areas the exposed portions of CT enclosures must be fabricated using 300 series stainless steel. Contact a District representative for any service location within ½ mile of a coastline.

SECTION 4.1.3 C.T. ENCLOSURE AND CONDUIT BY CUSTOMER

Customer provides the C.T. enclosure with landing pads rated for the service ampacity, installs line and load-side wiring, and provides necessary "meter conduit." The Customer shall terminate all service conductors to the current transformer landing pad. All connectors shall be bolted to the landing pads with stainless steel bolts, flat washers, Belleville washers and silicone bronze nuts or installed into lugs that are provided with the C.T. enclosure as per detail on Drawing #33. The high leg conductor of a delta service shall be marked with orange tape and connected on the right-hand side in the C.T. enclosure. The Contractor shall identify and tag all conductors indicating common phase and whether they are source or load.

SECTION 4.1.4 DISTRICT INSTRUMENT TRANSFORMERS

The District provides and installs bar-type C.T.s. The District attaches the C.T.s to the landing pads mounted to the back of the current transformer enclosure and installs the metering conductors and test switches and installs the meter.

SECTION 4.1.5 THE C.T. ENCLOSURE SIZES REQUIRED

The C.T. enclosure sizes required shall be as listed below:

Service Size	Minimum Enclosure size (H x W x D)
400 Amperes Single Phase	36” x 36” x 11” with Hinged Door
600 Amperes Single Phase	36” x 36” x 11” with Hinged Door
800 Amperes Single Phase	36" x 36" x 11" with Hinged Door
400 Amperes 3-Phase	36" x 36" x 11" with Hinged Door
600 Amperes 3-Phase	48” x 36” x 11” with Hinged Door
800 Amperes 3-Phase	48" x 36" x 11" with Hinged Door

In some instances, larger enclosures may be required to accommodate conductor bending radius requirements.

SECTION 4.1.6 CABINET COVER SIZE

Cabinet covers, pull box covers, C.T. cabinet covers, and any miscellaneous service equipment covers shall be limited to 36" by 48". All covers shall be hinged. All doors shall be equipped with provisions for locking.

SECTION 4.1.7 CABINET MOUNTING HEIGHT

Current transformer enclosures shall be mounted such that the bottom of the enclosure is no higher than 3’ above grade or the bottom lower than 6" above grade. (See Drawing #26).

SECTION 4.1.8 NO METERS ON C.T. ENCLOSURE COVER

The cover of an instrument transformer enclosure shall be free of meters or equipment.

SECTION 4.1.9 C.T. ENCLOSURE NOT A CONDUCTOR

The current transformer enclosure shall not be used as a current carrying conductor.

SECTION 4.1.10 ENCLOSURES SHALL BE GROUNDED

All outdoor current transformer enclosures shall be grounded with a #6 copper ground wire to a ground rod at the meter location. (See Drawings #25, 26, 27, & 28).

SECTION 4.1.11 C.TS MOUNTED ON SERVICE POLES

C.T.s may be mounted on service poles when the Customer wiring extends directly from the service pole to multiple load centers. The District shall supply a suitable mounting bracket for the C.T. (See Drawing #8).

SECTION 4.1.12 MAST-MOUNTED CURRENT TRANSFORMERS SHALL NOT BE ALLOWED

SECTION 4.1.13 OUTDOOR INSTALLATION LOCATIONS

The meter device shall normally be mounted on an outdoor building wall, a remote pedestal, or a service pole. The meter enclosure or socket, subject to meter location policy, should be located as close as practical to the C.T.s. Enclosures shall not be located in carports, breezeways, porches, or such locations where subsequent addition, rewiring, or remodeling could enclose the enclosure. An enclosure installed in an alley or driveway must be recessed in the wall or protected adequately to prevent damage from vehicular traffic.

SECTION 4.1.14 METERING NOT ON DISTRICT EQUIPMENT

Metering, except current transformers, shall not be mounted on or in District equipment except on service poles if approved in advance. All pole-mounted meter equipment shall be grounded with a #6 copper ground wire to a ground at the meter location. (See Drawings #7 & 8).

SECTION 4.2 SERVICE AMPACITY LARGER THAN 800 AMPERES

SECTION 4.2.1 SWITCHGEAR C.T.

For services with ampacity greater than 800 A, the C.T. enclosures shall be part of the Customer service panels or switchgear. The District should be consulted for review of compartment size and service prior to purchasing and installing equipment. The C.T. space shall have bus bars through the C.T.s that are removable from within the C.T. compartment space. The C.T.s shall be furnished and installed by the District. Cables must be landed on hardware independently supported from the bus link through C.T. window. Cables shall not be brought through the C.T. window. Customer or Contractor shall terminate all conductors with 2-hole connectors and bolt to the current transformer landing pad bus bars. (See Drawing #29A & 29B).

SECTION 4.2.2 ENCLOSURES TO BE ACCESSIBLE

Enclosures shall not be installed on ceilings. If the enclosure is installed on a balcony or platform, it must be available by a permanent stairway and be

surrounded by a railing, both of which conform to OSHA requirement.

SECTION 4.2.3 C.TS READILY ACCESSIBLE

On switchboards, the instrument transformers shall be installed in such a manner as to be readily accessible after all bussing is in place. Installation plans regarding size of cubicle and placement of equipment shall be approved by the District before switchboard manufacturing. Neutral connections for metering shall be readily accessible and sealable. If CT's are in enclosed area including, buildings, fenced areas etc. The customer shall be responsible for purchasing a lock box labeled for the District use only. The lock box will contain a key for entry to enclosed area. The District must pre-approve any substitutions for the lock box.

SECTION 4.2.4 UNMETERED CONDUCTOR COMPARTMENTS SEALED

All sections of the switchgear that contain unmetered conductors shall have provisions for sealing compartment doors or covers.

Section 4.2.5 METER BASE AND Test SWITCHES

Meter base & bypass switches cannot be integral to switchgear equipment. Preference is for mounting on side of CT cabinet (See Drawing 29B). The district provides meter CT wiring and test switches. Contractor provides and installs meter base, and conduit.

SECTION 4.3 PRIMARY VOLTAGE METER INSTALLATIONS - OVER 600 V

SECTION 4.3.1 METERING LOCATION APPROVAL

Primary service is metered with the instrument transformer(s) located outdoors and will be either pole-mounted or pad-mounted. The location of all instrument transformer metering installations must be approved by the District in advance of any work by the Customer or Customer's contractor. The primary metering shall be located at the interface between District facilities and the Customer's facilities.

SECTION 4.3.2 DISTRICT PROVIDES, INSTALLS, MAINTAINS AND OWNS METERING AND ASSOCIATED EQUIPMENT

At customer expense, the District will provide, install, maintain and own all equipment associated with primary metering up to the load side of the current transformer(s) on all pole or pad-mounted installations.

SECTION 4.3.3 CUSTOMER PROVIDES SWITCHES, ETC.

Customer provides all necessary– primary wiring, switches, fusing or other over-current protection, lightning arresters, grounding and etc., from the load side of the current transformer to the Customer's service equipment.

SECTION 4.3.4 CUSTOMER'S WIRING CONNECTED BY DISTRICT

The District will connect Customer's wiring to District primary voltage supply conductors and instrument transformers.

SECTION 4.3.5 POLE MOUNTED PRIMARY METERING

Pole mounted primary metering will be mounted on a District owned pole.

SECTION 4.3.6 PAD MOUNTED METERING ENCLOSURE

At Customer expense, the District will provide, install, own and maintain pad-mounted metering enclosures for underground installations.

SECTION 5: CUSTOMER WIRING AND INSTALLATION

SECTION 5.1 NOTIFY DISTRICT OF NEW OR REWIRE WORK

Customer or Contractor should promptly notify the District (refer to Section 1) of the electrical work planned. Prompt notification will minimize wiring problems and avoid unwanted delays when work is completed.

SECTION 5.2 WIRING INSPECTION

Customer wiring may be subject to inspection and approval by Washington State Wiring Inspector. Contact Department of Labor and Industries for requirements. For areas outside of L&I jurisdiction a property owner representative must authorize, in writing, the energizing of service wiring in conjunction with an independent electric inspection. Circumstances generally requiring wiring approval before service can be connected or reconnected are:

- New wiring is installed or existing wiring is added to, repaired, or altered.
- Any service de-energized for more than one year.
- Fire - Service has been ordered disconnected by the Fire Department, disconnected by the Fire Department themselves, or disconnected by the District personnel because of hazard to the public.
- Storm or Vandal Damage - Disconnected by the District personnel because of danger or hazard to the public. The District will promptly notify the inspection authority.
- Ordered disconnected by an electrical inspection authority because of defective or hazardous wiring.
- Disconnected by District personnel upon observing a hazard to the public caused by Customer wiring. The District will promptly notify the electrical inspection authority.
- Disconnected by District personnel at the request of the Customer or their electrical Contractor in order to add to, repair, or change the wiring. (Contractor can usually arrange by telephone for the electrical inspection authority to give verbal wiring approval to the District).

SECTION 5.3 EMERGENCY REPAIRS AFTER HOURS, WEEKENDS AND HOLIDAYS

Reconnection can be made for emergency reasons if Contractor provides the District with electrical license and work permit number. The District will promptly notify electrical inspection authority of this action.

SECTION 5.4 DIVERSION OF SERVICE

It is illegal to tamper with a District meter or metering equipment and to make unauthorized connections and reconnections of service with the intent to divert electrical energy from being properly metered. Such diversion is subject to service cutoff and legal action.

SECTION 5.5 CONTRACTOR ACCESS

Contractor may access Customer-owned and District secured meter and C.T. equipment in the pursuit of legitimate work. The Contractor is required to inform the District within 24 hours of this action and the work intended, by calling the appropriate District office. Failure to provide prompt notification will cause access to be considered unauthorized and subject to legal action.

SECTION 5.6 GROUNDED NEUTRAL

All services shall have a grounded neutral. Three-phase, 3-wire metered services are not permitted.

SECTION 5.7 COMMUNICATION BONDING

Telephone and/or other electronic equipment may require grounding external to Customer premises. Such ground connections are not permitted inside District sealed and secured cable and meter compartments.

SECTION 5.8 DISTRIBUTION CENTER POLE METERING

Farm Customer may desire service at a number of locations making it uneconomical to distribute from a meter located at the residence. In such cases, Customer can request a distribution center pole on which District meter is installed and from which Customer extends service to the various locations.

SECTION 5.9 TRANSFER EQUIPMENT

Transfer equipment, including transfer switches, shall operate such that all ungrounded conductors of District source of supply are disconnected before any ungrounded conductors of the second source are connected.

SECTION 5.10 CUSTOMER GENERATION

The following general requirements apply to customer generation facilities designed to operate directly connected to the District's electrical system (parallel operation) and those that are designed to operate isolated from the District's system (non-parallel operation). Requirements and specifications for various types and sizes of customer facilities shall be obtained from the Customer Service Representative prior to installation.

1) Standby Generation (Non-Parallel Operation)

   The Customer may install a standby generator to supply all or part of the load in the event of a service interruption. The customer's wiring shall be arranged so as to prohibit the interconnection of the District's service and the customer's alternate source of supply. This will require the installation of a double-throw switch or its equivalent as approved by the District. Drawing #37 schematically illustrates some typical installations of standby generating equipment.

   Note: Precautions must be taken where alternate means of generation are employed, whether emergency or otherwise, to eliminate the possibility of electrical connection between the District's service and the customer's alternate source of supply. The customer must notify the District and provide electrical details of generator installation and isolation from the District's system.

2) Auxiliary Generation, Net Metering and Production Metering (Parallel Operation)

   Prior to the installation and operation of any auxiliary generation facilities (e.g. wind turbine, solar panel, etc.) and net-metering or production metering, the customer must notify the District to obtain approval for the installation and enter into an Interconnection Agreement for metering. Additional information and requirements can be found in District's **Net Metering Reference Materials:**

   - **Customer Checklist for Utility Interconnection**
   - **Standards for Interconnection with Electric Generators**
   - **Application for Interconnecting a Generating Facility No Larger than 100KW**
   - **Net Energy Metering Interconnection Agreement**
   - **Generating Facility Certificate of Completion**

3) Cogeneration (Parallel Operation)

Co-generators are defined as facilities that produce electrical energy and utilize the heat energy by-product for other purposes (e.g., heating or cooling). The customer must notify the District prior to the installation of this equipment in order to provide design information and obtain approval for connection of the equipment the District's facilities.

SECTION 6: MOTORS AND APPARATUS

SECTION 6.1 GENERAL

Customer is advised to consult the District before purchase, installation, or wiring of motors or other apparatus to determine the kind of service that will be supplied and the manner in which such equipment should be connected.

SECTION 6.2 MOTOR CHARACTERISTICS

All motors, apparatus, and appliances shall have such characteristics, which enable the District to maintain a satisfactory standard of service to Customer being served and all other Customers in the immediate area, including starting current and harmonic characteristics. Customers shall install no motors whose starting shall cause a voltage drop greater than 3% at the service meter point where such service supplies non-motor loads, nor greater than 2% at a neighboring point of service. Changes in District service equipment to accommodate such motors may be at Customer expense.

SECTION 6.3 SERVICE TYPE DESIGNATION BY DISTRICT

The District reserves the right to select the type of service to be supplied and should be consulted before equipment is purchased or ordered. Single phase motors larger than 5 horsepower or a combination of single or poly-phase motors exceeding15 horsepower requires approval of the District.

SECTION 6.4 SPECIAL MOTORS

Starting current mitigation or soft start technology at customer expense may be a requisite to meet Section 6.2 requirements, including application 3-phase motors

beyond single phase conversion devices. Starting motors across line voltage is permitted where Section 6.2 requirements are maintained.

SECTION 7: PROTECTION AGAINST ABNORMAL CONDITIONS

SECTION 7.1 UNDER-VOLTAGE PROTECTION

All motors and special apparatus should be equipped with suitable undervoltage time delay tripping devices to protect against sustained undervoltage or service interruption and to prevent automatic disconnection of equipment upon momentary voltage disturbance.

SECTION 7.2 SINGLE-PHASE PROTECTION

Three-phase motors should be equipped with suitable protective devices to prevent single-phase operation, improper direction of rotation and excessive heating due to over current.

SECTION 7.3 THE DISTRICT WILL NOT BE RESPONSIBLE FOR DAMAGE

The District will not be responsible for damage to Customer equipment due to failure of Customer to provide adequate protection.

SECTION 7.4 UNINTERRUPTIBLE POWER SUPPLY

Customer should consider installing an Uninterruptible Power Source (UPS) or voltage suppressers where momentary or extended outages or voltage fluctuations will cause inconvenience, loss of electronic memory, or trip alarms, etc.

SECTION 8: TRENCHING REQUIREMENTS

SECTION 8.1 GENERAL CABLE TRENCH REQUIREMENTS

1) Customer Provided

   All trenches shall be provided by the Customer. Inspection and acceptance by the utility's representative is required.

2) Definition

   Trench shall be defined to mean trenching, bedding, backfilling, restoration, and maintenance of subsequent ditch settling for electrical cables and conduits.

3) Notification

   The District, all participating utilities, and the Underground Locating Center, shall be notified a minimum of 48 hours in advance of the date and time for the right-of-way trenching and facility placement. Locating services notification is required by state law.

SECTION 8.2 ROOT AND ROCK RESTRICTIONS

The trench shall be free of rocks or roots greater than 2" in diameter.

SECTION 8.3 SPECIFICATION DRAWINGS

The trench shall be dug to the specifications shown on Drawings #30, 31, & 32, unless otherwise approved by a District representative.

SECTION 8.4 WATER-FREE TRENCH

The Customer is responsible for installing well points, pumping, or other measures to provide reasonably water-free trenches.

SECTION 8.5 ACCESS, CONSTRUCTION

To facilitate installation, the Customer shall place all excavated material in a manner, which allows the District's installation vehicle to drive on the opposite side of the trench the full length of the project unless other specific arrangements are approved by the District representative.

SECTION 8.6 SLOPING AND SHORING

Any area where District personnel must enter the trench shall be excavated in accordance with Chapter 296-155 WAC of the Washington State Safety Code. The Code requires that the excavated material be at least 2' from the edge of the trench and that any trench over 4' deep be sloped, shored, sheeted, or otherwise adequately protected.

SECTION 8.7 JOINT USE OF TRENCHES (SEE DRAWING #30)

SECTION 8.7.1 DIRECT BURIED CABLE SEPARATION

A minimum vertical and horizontal separation of one foot must be maintained between direct buried electric cables and communication cables.

SECTION 8.7.2 ELECTRIC CABLE IN CONDUIT, NO SEPARATION REQUIRED

Electric cables installed in conduit and communication cables may be buried together at the same depth with no deliberate separation between facilities if both utility owners concur.

SECTION 8.7.3 WATER AND SEWER LINES

A water service line, up to 1½" may be installed at 18" above District cables. No sewer lines or water mains will be allowed in any electrical trench.

SECTION 8.8 PERMANENT ACCESS

All surface areas above direct-buried cable and cable in conduit must be accessible for future District operations including, but not limited to, maintenance, location, repair, and replacement. The Customer shall not construct any building, fence, landscaping device, or other obstruction over the direct-buried cable route that restricts said access. In addition, customers should consider that cable in conduit routes may also need to be accessed in the event the conduit system fails or otherwise needs to be repaired or maintained. All transformers and other aboveground devices must remain accessible to District vehicles at all times and the opening side of the device must have at least 10' of clearance from any obstruction. The District handout on padmounted equipment requirements provides more details. (See Drawings #34 and 35). Failure by the customer to maintain accessibility to all District facilities may result in delays in repairs and the restoration of service to the customer.

SECTION 8.9. CABLE PULLED INTO CONTINUOUS CONDUIT

When service cable is installed in continuous conduit, the cable shall be pulled into conduit after it has been assembled (conduit shall not be installed by slipping over cable as it introduces rock and dirt into the conduit and does not allow for an adequate sealing procedure). See Chart #1 for minimum conduit and sweep sizes allowed for conductor sizes.

SECTION 8.9.1 PVC JOINTS MUST BE GLUED

Each PVC conduit joint must be permanently glued, prior to cable installation.

SECTION 8.9.2 MAXIMUM NUMBER OF BENDS IN SERVICE CONDUIT

Total number of bends in a service run shall not exceed 360 degrees. All bends shall be long radius type (24-inch minimum). See Chart #1 for minimum sweep dimensions for various conduit sizes.

SECTION 8.9.3 CONDUIT UNDER BUILDINGS

No structure may be built over District facilities except when it is absolutely unavoidable. Written approval of the Manager of the District is required.

1) The required conduit(s) shall be paralleled by an equal spare conduit(s) from the pole to the vault or between vaults.

2) Conduits shall not pass through nor conflict with the building's foundation walls.

3) Conduit(s) shall be encased in concrete. Minimum encasement shall be 2" thick on all sides of the conduit.

    a. Exception: The concrete encasement requirement can be waived if the building will have a minimum 4" thick concrete slab first floor and no basement.

4) A Hold Harmless Clause will become part of the power line easement.

5) Total number of bends shall not exceed 180 degrees.

6) Continuation and restoration of service cannot be assured if a structure is built over District lines. One of the following remedies shall apply:

    a. Removal of the structure(s).
    b. Payment to reroute the line(s) around the structure(s).

    c. Customer acknowledgement that additional restoration expense caused by the structure(s) shall be billed to the customer. This will generally apply when a cable fault occurs under the structure and the raceway, if available, is unusable.

SECTION 8.10 EQUIPMENT LOCATIONS PERMANENT

The Customer is responsible for establishing the location and grade of the cable trench route and transformers, junction boxes, or secondary pedestals that are shown on the sketches provided by the District. The transformer, junction box, and pedestal locations are considered permanent and moving them is difficult and expensive. In the event any of these facilities need to be relocated, the entire cost will be at the Customer's expense. We recommend that a licensed surveyor be used to determine the lot lines, property corners, right-of-way, and easements to ensure that the facilities are properly located.

SECTION 8.11 THE CUSTOMER SHALL PROVIDE FINAL GRADE

The Customer shall provide final grade at the site of a transformer or other aboveground devices. After installation, the Customer shall not change the cable depth by cutting or filling without the express consent of the District.

SECTION 8.12 BACKFILL BEDDING MATERIAL

Bedding material for backfill will be subject to approval by a District representative. The Customer will provide the appropriate bedding material when native material is unsuitable. The Customer shall place the approved bedding material in the trench in sufficient quantity to protect the conduit, prior to installation. The Customer shall place an equal amount of approved bedding material over the installed conduit prior to backfilling with native materials. The typical requirement is 6" of bedding below and 6" above the conduit.

SECTION 8.13 BACKFILL COMPACTION

All trenches shall be compacted to the satisfaction of the District in the following manner:

- Compacted sufficiently to prevent later settling of the fill material.

- For Trenches compact in lifts to attain 95% compaction. The Customer shall provide compatible 1" minus granular material (i.e. sand, screen reject, or pit run) should the District determine that native material is unsuitable for backfill. The surface material shall be replaced with material equal to existing surface (crushed rock, asphalt, concrete, etc.).

- For beneath transformers, pedestals, and above-grade devices - Compact in lifts to attain 95% compaction. The Customer shall provide compatible 5/8" to 3/4" minus granular material.

SECTION 8.14 ROAD BORES

All road bores should begin at a depth of 42 inches to the bottom of the bore hole

and exit or end with a depth of no less than 36” or no more than 48” below grade. Lesser or greater depth will not be accepted without the approval of a District representative. In addition, a gradual transition from the end of the bore into the 42 inch trench or excavation must be provided by the contractor.

SECTION 8.15 REQUIREMENTS BEFORE CONSTRUCTION

The District will schedule the Customer’s project only after required easements are received and necessary monies are paid. Trenching should not be started before consultation with a District representative and a date scheduled for the work. At this consultation, any special requirements for the trench will be outlined. The trench shall then be dug prior to the arrival of a District crew on the scheduled date.

SECTION 9: AREA LIGHTS AND STREET LIGHTS

SECTION 9.1 GENERAL

District will install area lighting facilities on District poles. New light installations are to conform to the specifications listed below and in accordance with WAC 296 46B. Existing contracts may be supplemented with additional lights utilizing previous installation methods as subject to NESC and NEC code restrictions.

SECTION 9.2 MAINTENANCE BY DISTRICT

District-owned light fixtures and services are maintained by District.

SECTION 9.3 RATES

Rates are based upon the light output and installation requirements. Contract rates apply with municipal Customers; flat rates apply for individual Customers as per District Rate Schedules.

SECTION 9.4 SERVED FROM OVERHEAD SYSTEMS

SECTION 9.4.1 DISTRICT LIGHTS ON DISTRICT POLES

District-owned and installed lights are installed on District owned and installed poles. If a new pole and/or transformer is required for service, special installation and monthly rates will apply. The following procedures apply:

1) Service contract signed by Customer.
2) Installation charges paid by Customer.
3) District installs pole, light, runs service, and maintains facilities.

SECTION 9.5 SERVED FROM UNDERGROUND SYSTEM

SECTION 9.5.1 DISTRICT LIGHTS ON DISTRICT POLES

District owned and installed lights are installed on District owned and installed poles. If a new transformer is required to provide service, an installation and special monthly rate will apply. The following procedures apply:

1) Service contract signed by Customer.
2) Installation charges paid by Customer.
3) Trench and backfill by Customer from source to light pole, if required.
4) Cable (minimum #12/2 cu, per NEC) and conduit, installed by customer from transformer or secondary pedestal to pole.
5) District installs light, connects service cable and maintains facilities.

SECTION 9.5.2 MULTIPLE LIGHTS

Multiple lights running off a single service run shall be metered, customer installed and maintained**.**

SECTION 10: COMMUNICATION EQUIPMENT ON DISTRICT POLES

SECTION 10.1 CONTACT APPROVAL REQUIRED

Contact approval is required for foreign contacts on District poles. Approval requires prior request to install and field check by District representative to determine that adequate space is available.

SECTION 10.2 DISTRICT RISER REQUIREMENTS

District Riser requirements regarding standoff brackets apply. A minimum of 6" of space between the cabinet and the surface of the pole to which it is mounted shall be maintained.

SECTION 10.3 WASHINGTON STATE WIRING PERMIT REQUIRED

Wiring permit requirements apply. The equipment wiring shall be inspected by the Washington State Wiring inspector and approved prior to electrical connection by the District.

SECTION 10.4 DIMENSION AND WEIGHT LIMITS

Maximum size shall be 26" wide x 36" high x 16" deep and weigh 500 pounds or less.

SECTION 10.5 EQUIPMENT GROUNDING AS PER NEC

The equipment shall be effectively grounded to a grounding system installed by the communications company. Ground rod(s) shall be installed a minimum of 18" from the base of the pole on which the equipment is mounted.

SECTION 10.6 CLEARANCES AS PER NESC

The schedule 40 PVC or galvanized metallic conduit, capped with a weatherhead, shall terminate 8" below the level of the District's overhead secondary attachment or neutral position. The service shall include 18" of tail at the weatherhead. The Cabinet shall be mounted with the bottom no lower than 12' above ground.

SECTION 10.7 VOLTAGE AND PROTECTION

The unit shall be designed to operate from connection to a 240/120-volt, single-phase District secondary and will include back-feed voltage protection to prevent power from the unit being routed into the District's system.

SECTION 10.8 BATTERY FLAME PROTECTION

Battery pack auxiliary power supplies shall have batteries in the assembly, which have flame arrester vent caps and shall be protected from electrical spark by having separate metal containers. The batteries shall be located above the assembly's power inputs and transformer units to insure isolation of any gasses from open flame or spark. The battery containers and the cabinet shall be well vented.

SECTION 10.9 LOAD INFORMATION REQUIRED (WATTAGE OF POWER SUPPLY)

The District shall be notified of the connected load of the power supply prior to connection.

SECTION 10.10 RATES

In addition to the standard attachment fee, the customer shall pay the District a flat rate to cover the cost of providing electrical service to the auxiliary power supply unit. This rate shall be based upon the connected load.

SECTION 10.11 TRANSFER AND RELOCATION

In the event that it is necessary to replace or relocate a pole on which an auxiliary power supply unit is mounted, the customer shall transfer or relocate the unit at no cost to the District.

SECTION 11: CHARTS

CHART # 1 NON-METALLIC PVC DIRECT-BURIED CONDUIT

PVC Conduit must meet the following requirements:

1) The following information shall be imprinted on all PVC conduit:
    a. Manufacturers name or trademark
    b. Nominal size
    c. Material (PVC)
2) Schedule 40 or 80 PVC is required for service riser according to the NEC and NEMA STANDARD for applications listed below:
    a. Type III - Designed for normal-duty applications above ground (Sch 40).
    b. Type IV - Designed for heavy-duty applications above ground (Sch 80) (Hazardous areas, e.g. next to driveways) .
    c. Conduit bends shall be long-radius type.
        i. Minimums:

        2" - 24" Radius

        3" - 30" Radius

        4" - 48" Radius

        6" - 60" Radius
3) Residential secondary service conduit shall be a minimum 2" Schedule 40 PVC, NEMA Standard TC-2.
4) 5” conduit is not a District standard; must use 6” to be compatible when the District will be extending customer/contractor-installed conduits.

CHART # 2 MINIMUM CONDUIT SIZE BASED ON MAXIMUM FILL REQUIREMENTS, TRIPLEXED AND QUADRUPLEXED SECONDARY CONDUCTORS

XLP CONDUCTOR SIZE		TRIPLEX			QUADRUPLEX		
PHASE	NEUTRAL	NOMINAL O.D.	ONE RUN	TWO RUNS	NOMINAL O.D.	ONE RUN	TWO RUNS
1/0	2	1.06”	2"	3"	1.42"	3"	3"
2/0	1	1.17”	2"	3"	1.59"	3"	4"
3/0	1/0	1.27”	2"	3"	1.72"	3"	4"
4/0	2/0	1.39”	2"	3"	1.88"	3"	4"
250	3/0	1.53”	3”	4"	2.08"	3”	4"
350	4/0	1.72”	3"	4"	2.34"	3"	6"
500 (300)		2.00”	4"	6"	2.71"	4"	6"
750 (400)		2.35”	4"	6"	3.22"	4"	6"
1000 (500)		2.66”	4"	6"	3.63"	4"	n/a

(400) and (500) minimum size for neutral ampacity.

(300) size per Essex Cable Handbook could be 250 and have required neutral ampacity.

5" conduit is not District standard; must use 6" to be compatible when the District will be extending customer conduits.

Use NEC conduit sizing where the District will not own the conductors.

CHART # 3 CONDUCTOR SIZES AND TYPES ALLOWED FOR DISTRICT SERVICE WIRING INSTALLATIONS

RESIDENTIAL SERVICE CONDUCTORS

Aluminum Only

2

1

1/0

2/0

3/0

4/0

250

350

500

See Charts 1 & 2 For District Conduit Requirements

GENERAL POWER AND INDUSTRIAL

Copper or Aluminum

Per NEC

SECTION 12: DRAWINGS

Drawings contained here illustrate items of text and some typical service and meter arrangements. Further detail on these and other types of service arrangements may be obtained from the District. All installations must comply with the current NEC at the time of installation, and local ordinances or other requirements.

1) Service Brackets
2) Overhead Strike to Residence
3) Guying - Stiff Leg Type
4) Clearances: Services Over Ground and Roofs - A
5) Clearances: Services Over Ground and Roofs - B
6) Service Assembly Underground from Overhead Take-off
7) Metering Assembly, Self Contained, Pole Installation
8) Metering Assembly, CT, Pole Installation
9) Service Assembly, Overhead Temporary
10) Service Assembly, Underground Temporary
11) Metering Assembly, Wall Mounted, Self Contained
12) Meter Location On Buildings
13) Platforms For Elevated Meters
14) Meter Pedestal, Self-Contained
15) Meter Pedestal, Mobile Home
16) Meter Pedestal, 320 Amp Service
17) Meter Pedestal, CT Meter
18) Meter Socket Clip Arrangement
19) Meter Socket, 200 Amp, Single Phase
20) Metering, Self-Contained, Overhead Service, Single Phase
21) Metering, Self-Contained, Overhead Service, Three Phase

22) 320 A Lever Type Bypass Meter Base (Underground)

23) 320 A Lever Type Bypass Meter Base (Overhead)

24) 208/120V 3-Phase 4-Wire to Serve Multiple Occupancy

25) CT Enclosure Wiring, Single Phase, 400 to 800 A, Overhead

26) CT Enclosure Wiring, Single Phase, 400 to 800 A, Underground

27) CT Enclosure Wiring, Three-Phase, 400 to 800 A, Overhead

28) Metering, Overhead Service, 3-Phase, C.T. 400 to 800 A

29) Metering, Underground Service, 3-Phase, C.T., 800 A or greater

30) Trench Requirements - Depth, Width, Clearances

31) Underground Service, Wall Mounted Meter

32) Underground Service, Meter Pedestal

33) Conductors Terminated in Padmount Transformers by Customers

34) Padmount Transformer Clearances

35) Guard Posts for Padmount Transformers

36) Intentionally Blank

37) Standby Generator Schematic Connection Diagrams

SECTION 12

ELECTRIC SERVICE REQUIREMENTS DIAGRAMS

UPDATED: June 14th, 2021

ALSO SEE N.E.C. REQUIREMENTS

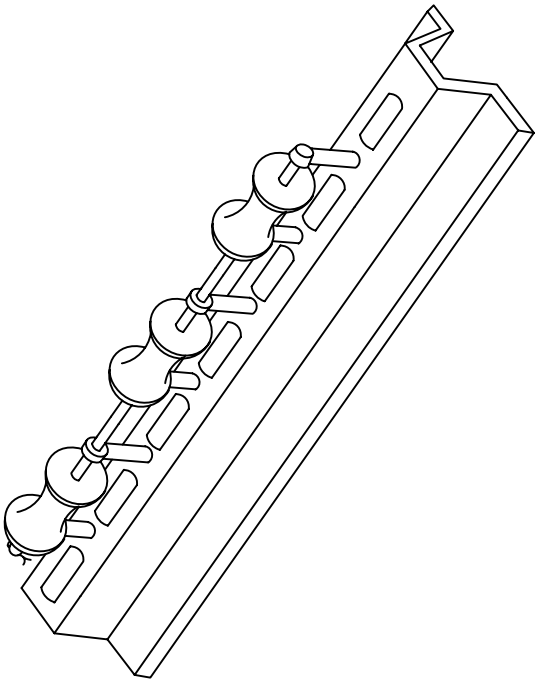

HEAVY DUTY
SERVICE BRACKET

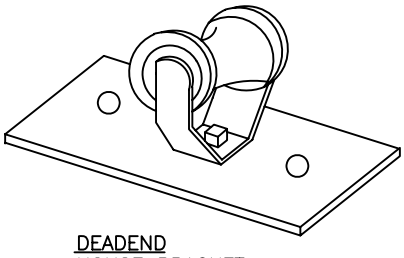

DEADEND
HOUSE BRACKET

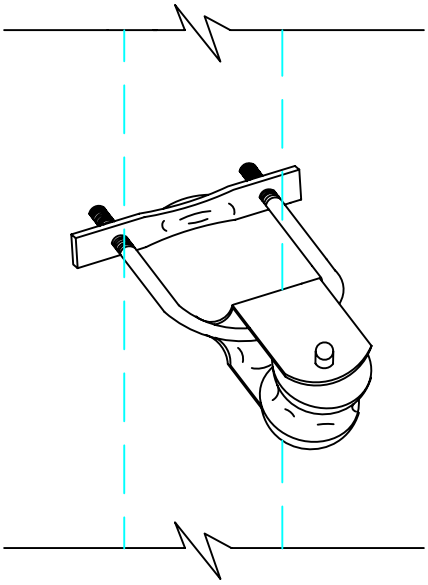

SERVICE MAST
BRACKET TRUNNEL

DATE 9/27/93	SCALE NONE	ELECTRICAL SERVICE REQUIREMENTS SERVICE BRACKETS		
DRAWN KMD	REVISED 05/05/93 10/29/98			
APPROVED		CLALLAM COUNTY PUD #1	PAGE 1 OF 37	DRAWNG # 1

H:\ENGSTANDARDS\SPECS\SERV1

ALSO SEE N.E.C. REQUIREMENTS

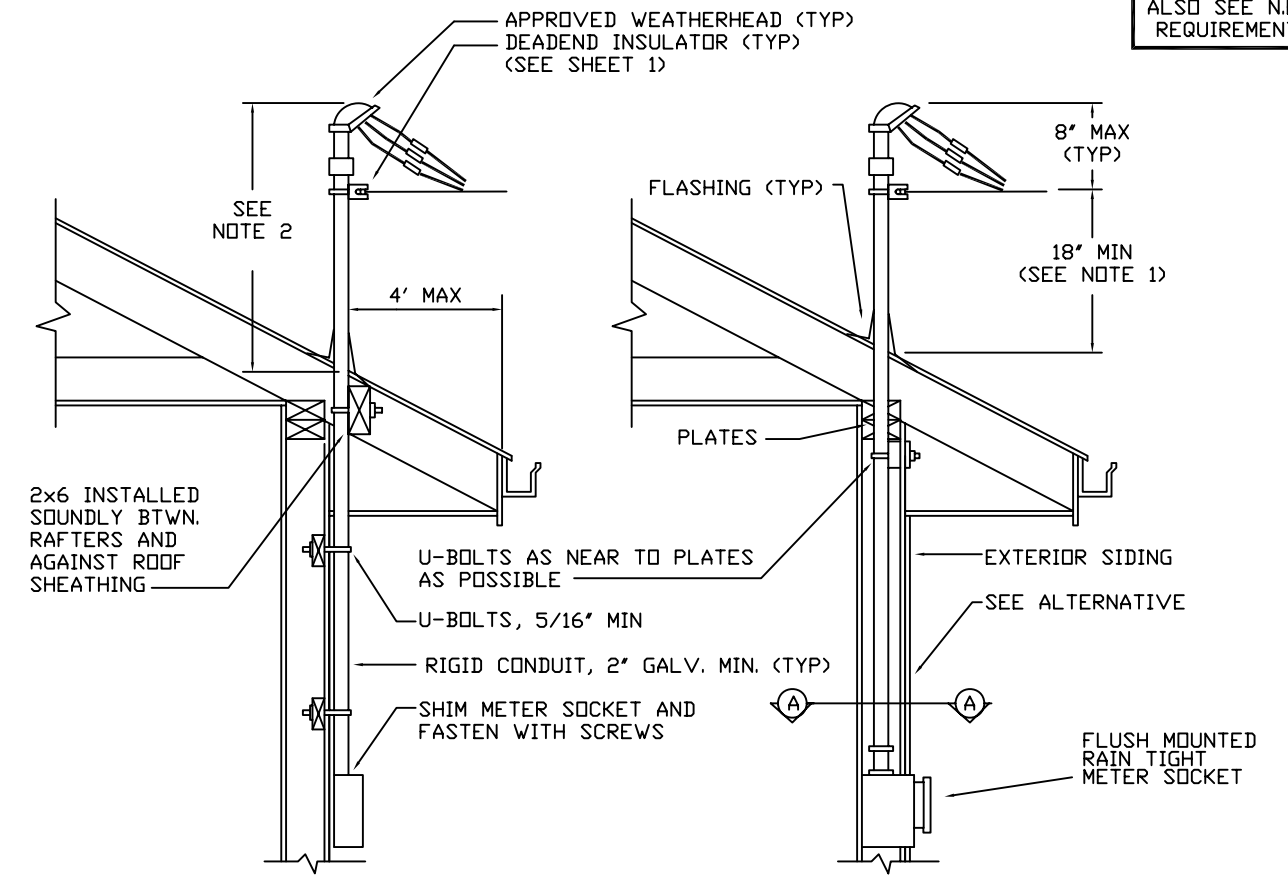

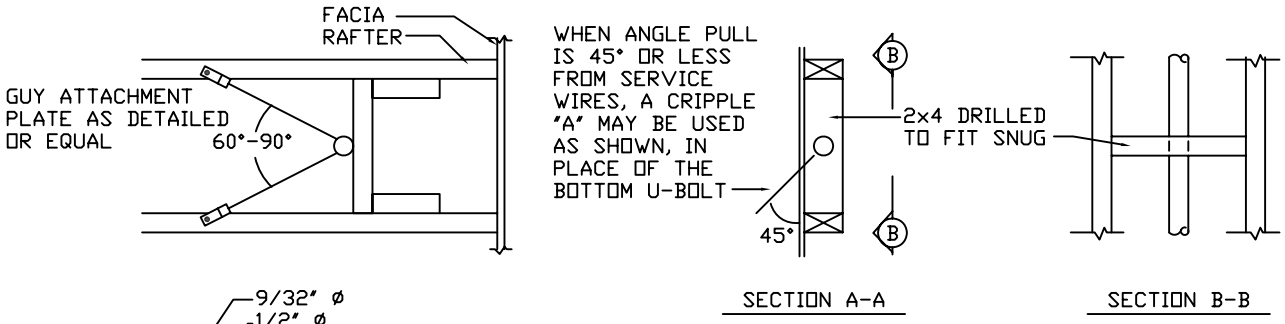

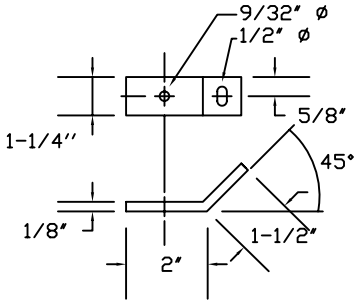

NOTE:

1) SERVICE MAST MAY BE INSTALLED INSIDE BUILDING LINES, PROVIDED MAST CONDUIT IS BRACED OR U-BOLTED. METER BASE SHALL BE GROUNDED WITH (2) 8' GROUND RODS (6' MIN SEPARATION) W/#6 COPPER CONNECTED TO ELECTRICAL EQUIPMENT.

2) ROOF LINE TO POINT OF STRIKE ATTACHMENT SHALL NOT BE LESS THAN 18".
WEATHERHEAD SHALL NOT BE MORE THAN 8" ABOVE POINT OF ATTACHMENT.
WHERE MAST IS OVER 26" HIGH OR SERVICE DROP EXCEEDS 100', GUYS ARE REQUIRED.
SEE NEC SECTION 230-24 FOR OTHER ROOF CLEARANCES & REQUIREMENTS.

DATE 12/86	SCALE NONE	ELECTRICAL SERVICE REQUIREMENTS OVERHEAD STRIKE TO RESIDENCE		
DRAWN SMH	REVISED 7/14/93 05/05/97 10/16/98 04/20/04			
APPROVED		CLALLAM COUNTY PUD #1	PAGE 2 OF 37	DRAWING # 2

H:\ENGSTANDARDS\SPECS\SERV2

ALSO SEE N.E.C. REQUIREMENTS

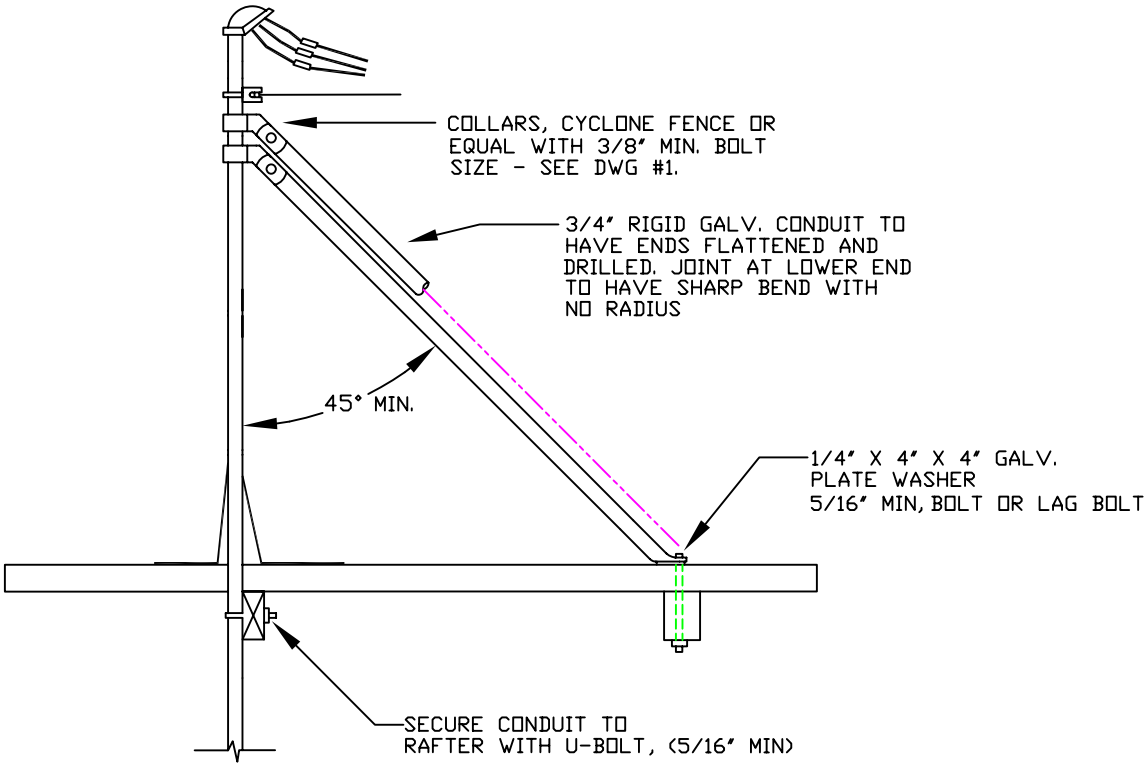

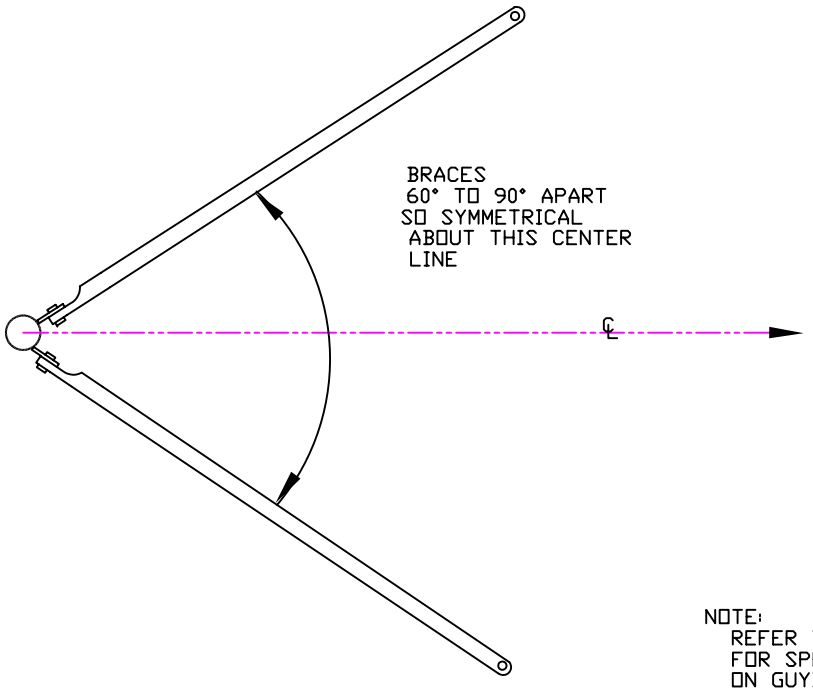

NOTE:
REFER TO DRAWING #2 FOR SPECIFICATIONS ON GUYING AND OVER-HEAD STRIKES

GUYING-STIFF LEG TYPE

DATE 12/86	SCALE NONE	ELECTRICAL SERVICE REQUIREMENTS GUYING-STIFF LEG TYPE		
DRAWN KMD	REVISED 09/15/93 10/11/04 10/17/94 05/05/97 10/29/98	CLALLAM COUNTY PUD #1	PAGE 3 OF 37	DRAWING # 3
APPROVED				

H:\FNGSTANDARD\SPECS\SFRV3

ALSO SEE N.E.C. REQUIREMENTS

CLEARANCES:

SERVICES OVER GROUND & ROOFS

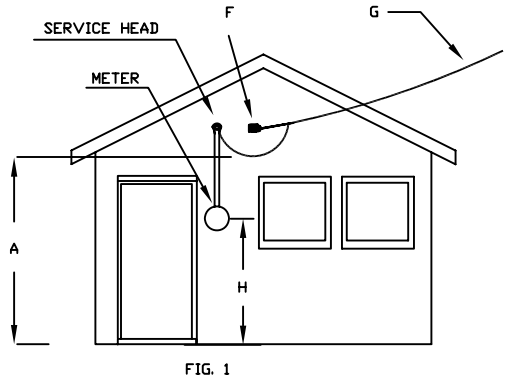

FIG. 1

USUAL INSTALLATION

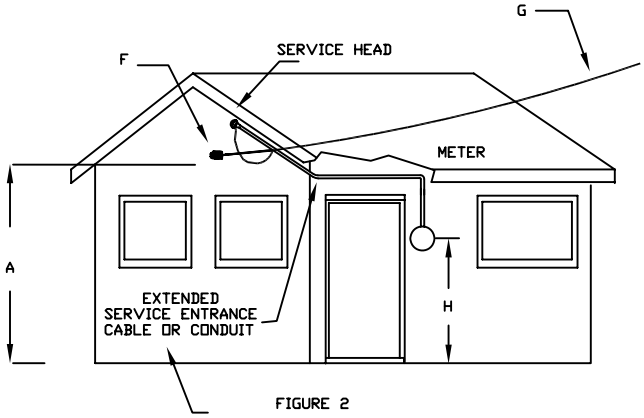

FIGURE 2

WHERE SERVICE WALL IS OF INADEQUATE HEIGHT
CUSTOMER EXTENDS SERVICE AS NECESSARY TO MEET
UTILITY COMPANY'S POINT OF ATTACHMENT

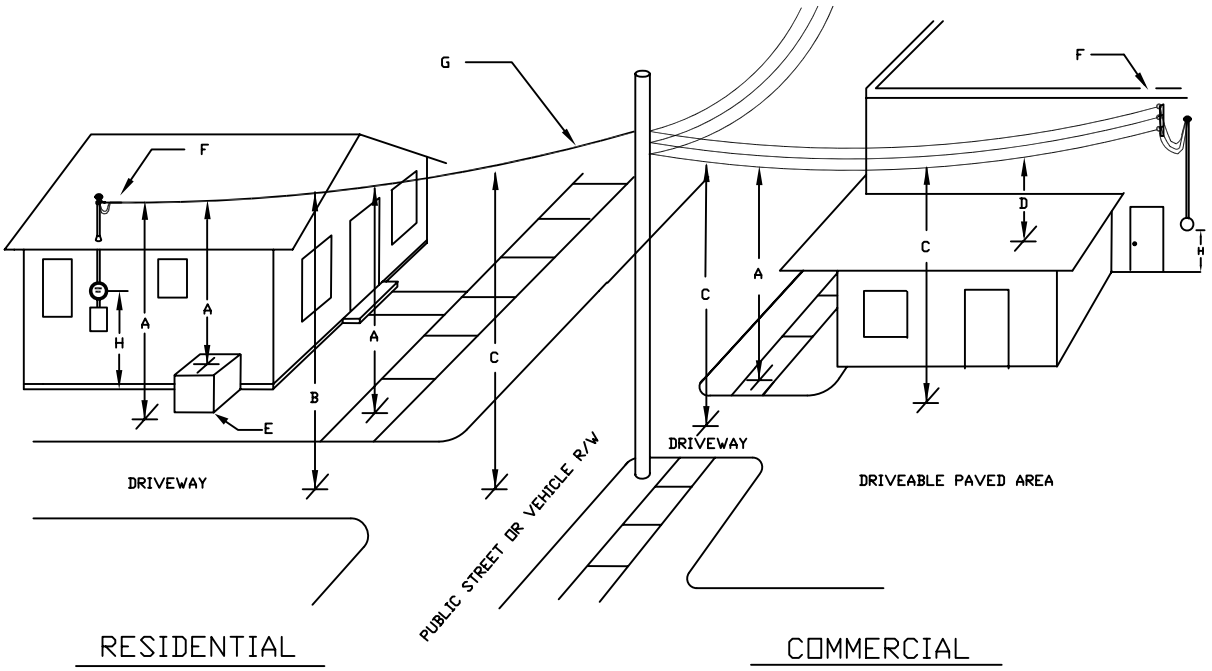

RESIDENTIAL

COMMERCIAL

DATE 3/3/97	SCALE NONE	ELECTRICAL SERVICE REQUIREMENTS CLEARANCES: SERVICES OVER GROUND & ROOFS - A		
DRAWN JAK	REVISED 05/05/97 05/05/97			
APPROVED		CLALLAM COUNTY PUD #1	PAGE 4 OF 37	DRAWING # 4

H:\ENGSTANDRD\SPECS\SERV4

ALSO SEE N.E.C. REQUIREMENTS

CLEARANCES : SERVICES OVER GROUND & ROOFS

OPEN WIRE OR TRIPLEX

MINIMUM REQUIRED CLEARANCES & NOTES

OVER GROUND

A 12ft OVER SPACES AND WAYS SUBJECT TO PEDESTRIAN OR RESTRICTED TRAFFIC ONLY. (NO VEHICLES OVER 8 FT HIGH.)

EXCEPTION Clearance may be reduced to 10ft at the drip loop or service drop cable limited to 150 volts to ground

EXCEPTION Clearance must be increased to 15ft for service voltages between 300 and 750 volts to ground

B 15ft RESIDENTIAL DRIVEWAYS, COMMERCIAL AREAS NOT SUBJECT TO TRUCK TRAFFIC.

EXCEPTION Clearance may be reduced to 12ft for triplex service cable limited to 150 volts to ground

C 18FT ROADS,STREETS,ALLEYS,NON-RESIDENTIAL DRIVEWAYS,PARKING LOTS AND OTHER AREAS SUBJECT TO TRUCK TRAFFIC.

24FT STATE HIGHWAYS

OVER ROOFS (INCLUDES PARKING GARAGES)

D Clearances from highest point in roof shall not be less than:

1. 3ft--Roof not accessible to pedestrians (See note)
2. 8ft--Roof accessible to pedestrians
3. 10ft--Roof accessible to vehicles, but not truck traffic
4. 18ft--Roof accessible to truck traffic

NOTE:

A roof is considered accessible to pedestrians if there is a means of access through a doorway, ramp, stairway or permanently mounted ladder, or if slope of roof is less than 4 in per ft

E Any equipment housing including air conditioning, platform or projection which a person might stand on

F Service mast, bracket attachment or upright of adequate size and height

G Normally triplex conductors, but may be separate as shown for commercial

H See Section 3.3.2 regarding meter mounting heights

EXCEPTIONS:

1. For open wire service with voltages between 300 and 750 volts to ground the 3ft clearance described above must be increased to 8ft
2. Where voltage between conductors does not exceed 300 volts, a reduction in clearance over the roof to 18in minimum is permitted if:
   1. They do not pass over more than 4ft of the overhang of the roof
   2. They are terminated at a through-the-roof raceway or approved support

DATE 3/3/97	SCALE NONE	ELECTRICAL SERVICE REQUIREMENTS CLEARANCES: SERVICES OVER GROUND & ROOFS - B		
DRAWN JAK	REVISED 5/05/97 8/13/04 10/29/98 04/20/04	CLALLAM COUNTY PUD #1	PAGE 5 OF 37	DRAWING # 5
APPROVED				

H:\ENGSTANDRD\SPECS\SERV5

ALSO SEE N.E.C. REQUIREMENTS

PUD SERVICE POLE:

OVERHEAD SERVICE FROM PADMOUNT TRANSFORMER
UNDERGROUND SERVICE FROM OVERHEAD TRANSFORMER

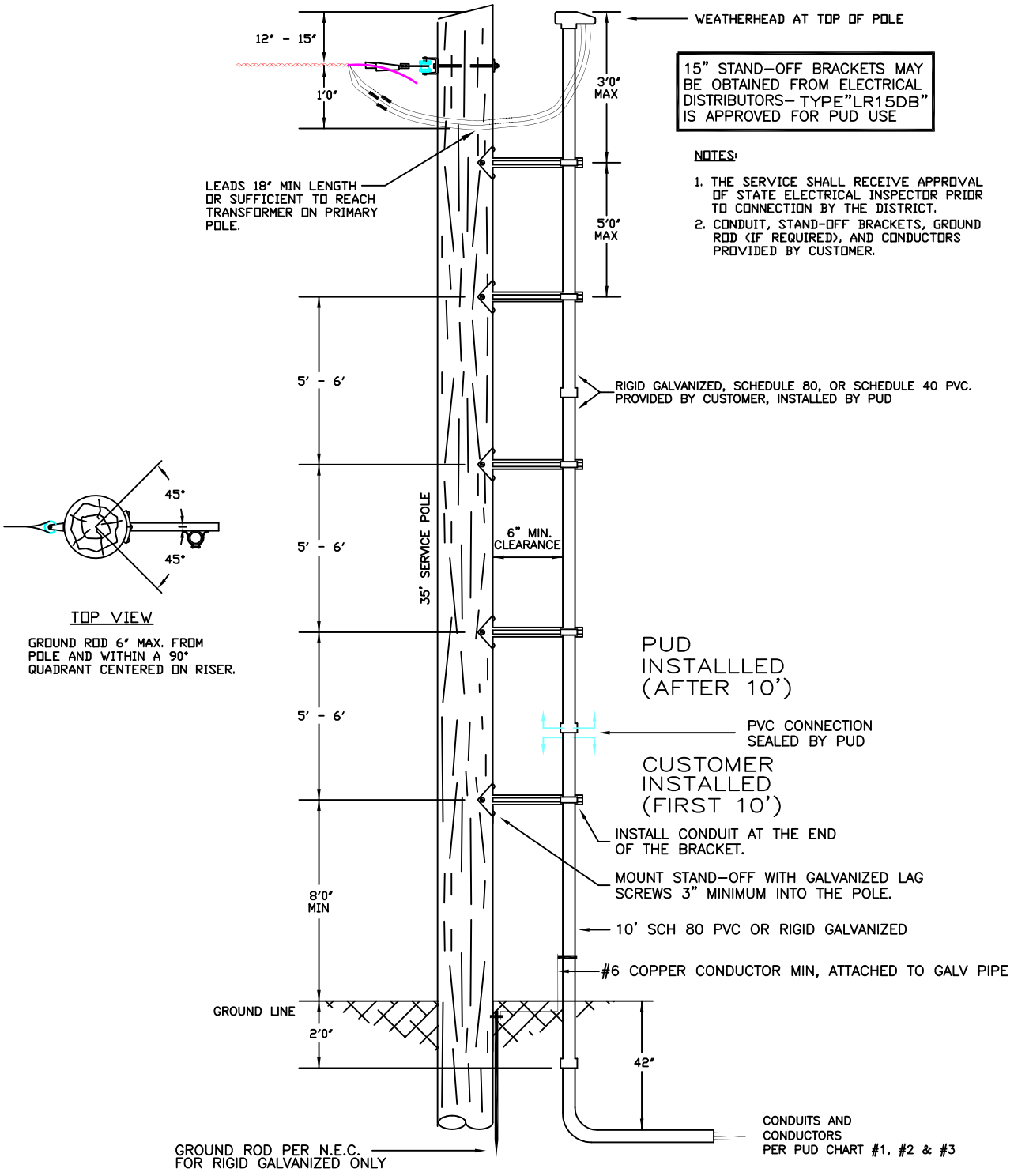

REV: STANDOFF SEPARATION

DATE 7/8/82	SCALE: NONE	ELECTRICAL SERVICE REQUIREMENTS SERVICE POLE - CONDUIT & STAND-OFF ASSEMBLY
DRAWN NB	REVISED 03/03/93 02/07/03 10/17/94 04/20/04 05/05/97 08/13/04 10/29/98 08/02/14 03/14/00	
APPROVED		CLALLAM COUNTY PUD #1 / PAGE 6A OF 37 / DRAWING # 6A

Q:\ENGDATA\SPECS\SERV6

PUD PRIMARY POLE

ALSO SEE N.E.C. REQUIREMENTS

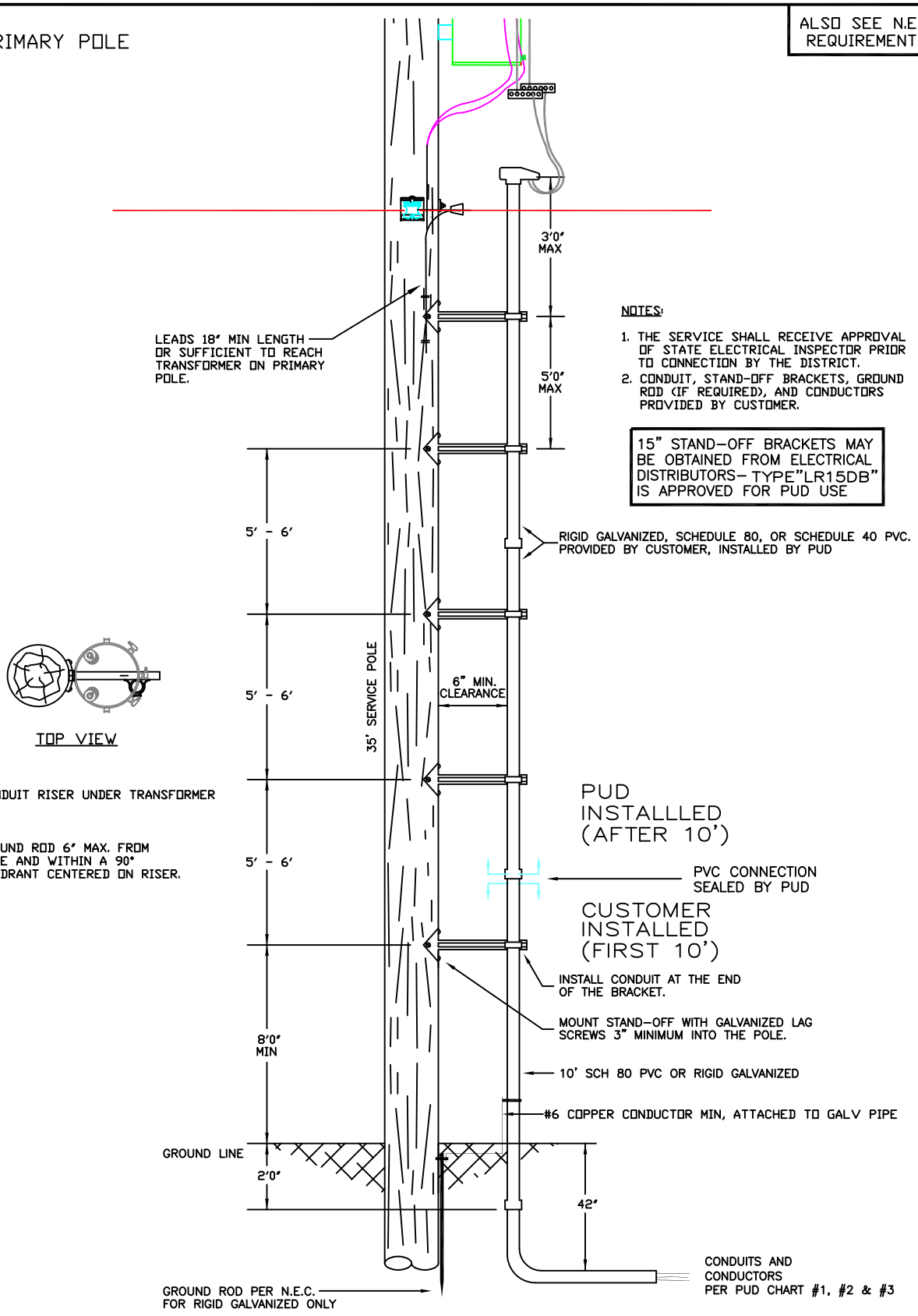

REV: STANDOFF SEPARATION

DATE 7/8/82	SCALE: NONE	ELECTRICAL SERVICE REQUIREMENTS PRIMARY POLE - CONDUIT & STAND-OFF ASSEMBLY	
DRAWN NB	REVISED 03/03/93 02/07/03 10/17/94 04/20/04 05/05/97 08/13/04 10/29/98 08/02/14 03/14/00		
APPROVED		CLALLAM COUNTY PUD #1	PAGE 6B OF 37 / DRAWING # 6B

Q:\ENGDATA\SPECS\SERV6

ALSO SEE N.E.C. REQUIREMENTS

OVERHEAD SERVICE DROP

FIGURE 3

SUPPLY CORD SERVICE

FIGURE 2

UNDERGROUND SERVICE

FIGURE 1

NOTE:
SERVICE EQUIPMENT MUST HAVE 8' GROUND ROD W. #6 COPPER CONNECTED TO ELECTRICAL EQUIPMENT

15" STAND-OFF BRACKETS MAY BE OBTAINED FROM ELECTRICAL DISTRIBUTORS - TYPE LR15DB" IS APPROVED FOR PUD USE

DATE 12/86	SCALE NONE	ELECTRICAL SERVICE REQUIREMENTS SERVICE POLE: METERING SELF CONTAINED INSTALLATION
DRAWN SMH/DT	REVISED 12/01/08 ACCESS POLICY 08/14 SVC UPDATES	
APPROVED		CLALLAM COUNTY PUD #1 — PAGE 7 OF 37 — DRAWING # 7

ALSO SEE N.E.C. REQUIREMENTS

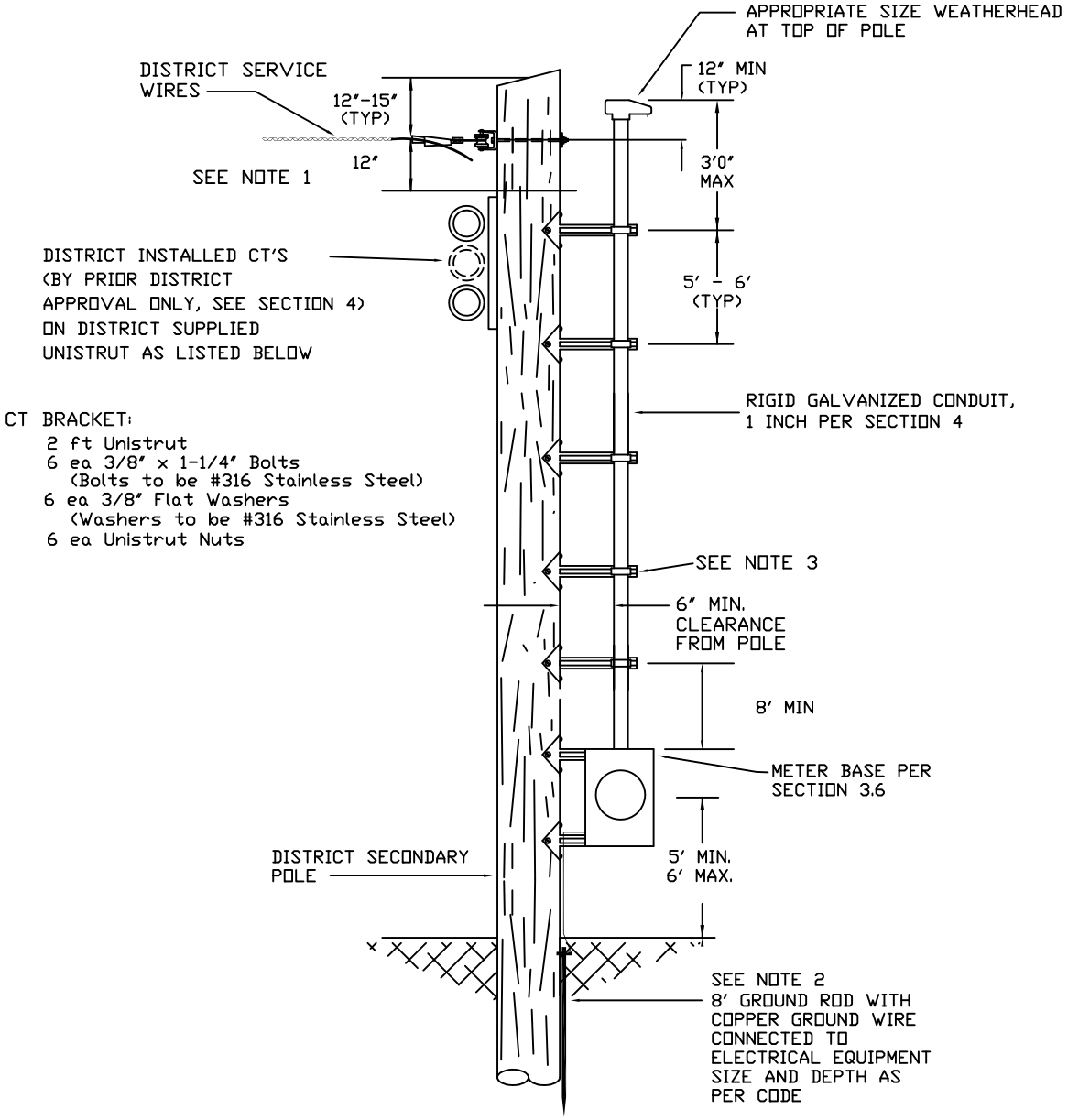

NOTES:

1. CUSTOMER SHALL PROVIDE SERVICE CONDUCTOR BETWEEN POLE AND CUSTOMER'S FACILITY. ALL CONDUCTORS SHALL HAVE A MINIMUM LENGTH OF 1 1/2 TIMES THE DISTANCE FROM THE SERVICE ATTACHMENT TO THE MOST DISTANT CURRENT TRANSFORMER.

2. ALL OUTDOOR ENCLOSURES MUST HAVE 8' GROUND ROD W/ #6 COPPER CONNECTED TO ELECTRICAL EQUIPMENT.

3. 15" STAND-OFF BRACKETS MAY BE OBTAINED FROM ELECTRICAL DISTRIBUTORS - TYPE LR15DB IS APPROVED FOR PUD USE.

DATE 7/19/93	SCALE NONE	ELECTRICAL SERVICE REQUIREMENTS METERING ASSEMBLY, C.T., POLE INSTALLATION		
DRAWN SMH / DT	REVISED 01/10/09 08/10/14	CLALLAM COUNTY PUD #1	PAGE 8 OF 37	DRAWING # 8
APPROVED				

H:\ENGSTANDRD\SPECS\DWG8

ALSO SEE N.E.C. REQUIREMENTS

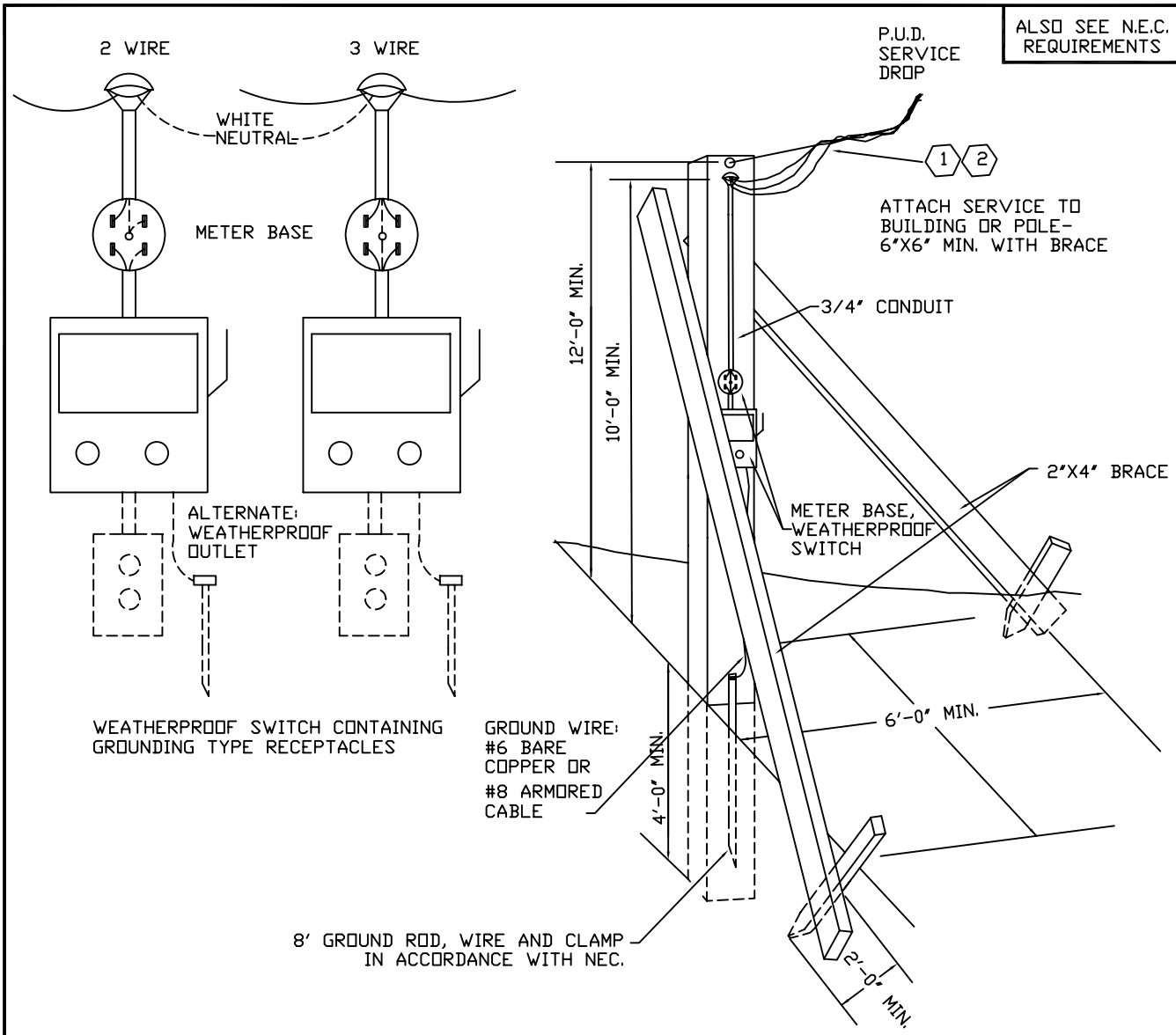

RECOMMENDED MIN. WIRE SIZE: 2–#8 BLACK, 1–#8 WHITE
WITH 30 AMP. WEATHERPROOF SWITCH

NOTES:

1. ALL WIRING MUST COMPLY WITH STATE OR LOCAL CODES; A STATE WIRING LABEL OR LOCAL WIRING PERMIT MUST BE IN EVIDENCE BEFORE SERVICE IS CONNECTED BY P.U.D.
2. RECEPTACLES SHALL BE PROVIDED WITH A GROUNDING CONTACT CONNECTED TO THE EQUIPMENT GROUND TO PERMIT EFFECTIVE USE OF THE GROUNDING TYPE PLUGS AND CORDS REQUIRED FOR PORTABLE TOOLS.
3. BRACING ADEQUATE TO SUPPORT THE SERVICE DROP MUST BE PROVIDED.
4. IF VEHICULAR TRAFFIC WILL PASS UNDER THE SERVICE, SUFFICIENT ATTACHMENT HEIGHT WILL BE REQUIRED TO PROVIDE A MINIMUM SERVICE DROP CLEARANCE OF 15' OVER PRIVATE PROPERTY, AND 24' OVER STATE HIGHWAY.
5. TEMPORARY SERVICE WILL BE PROVIDED IF FACILITIES AS SHOWN ARE WITHIN 150' OF A P.U.D. POLE; IF OVER 150', CONSULT THE NEAREST LOCAL OFFICE OF P.U.D. NO. 1 OF CLALLAM COUNTY.
6. POLE SHOULD BE LOCATED AS NEAR AS POSSIBLE TO PERMANENT SERVICE LOCATION.

DATE 9/27/93	SCALE NONE	ELECTRICAL SERVICE REQUIREMENTS SERVICE ASSEMBLY, OVERHEAD TEMPORARY		
DRAWN KMD	REVISED 05/05/97 10/29/98 01/20/09			
APPROVED		CLALLAM COUNTY PUD #1	PAGE 9 OF 37	DRAWING # 9

H:\ENGSTANDRD\SPECS\SERV9

ALSO SEE N.E.C. REQUIREMENTS

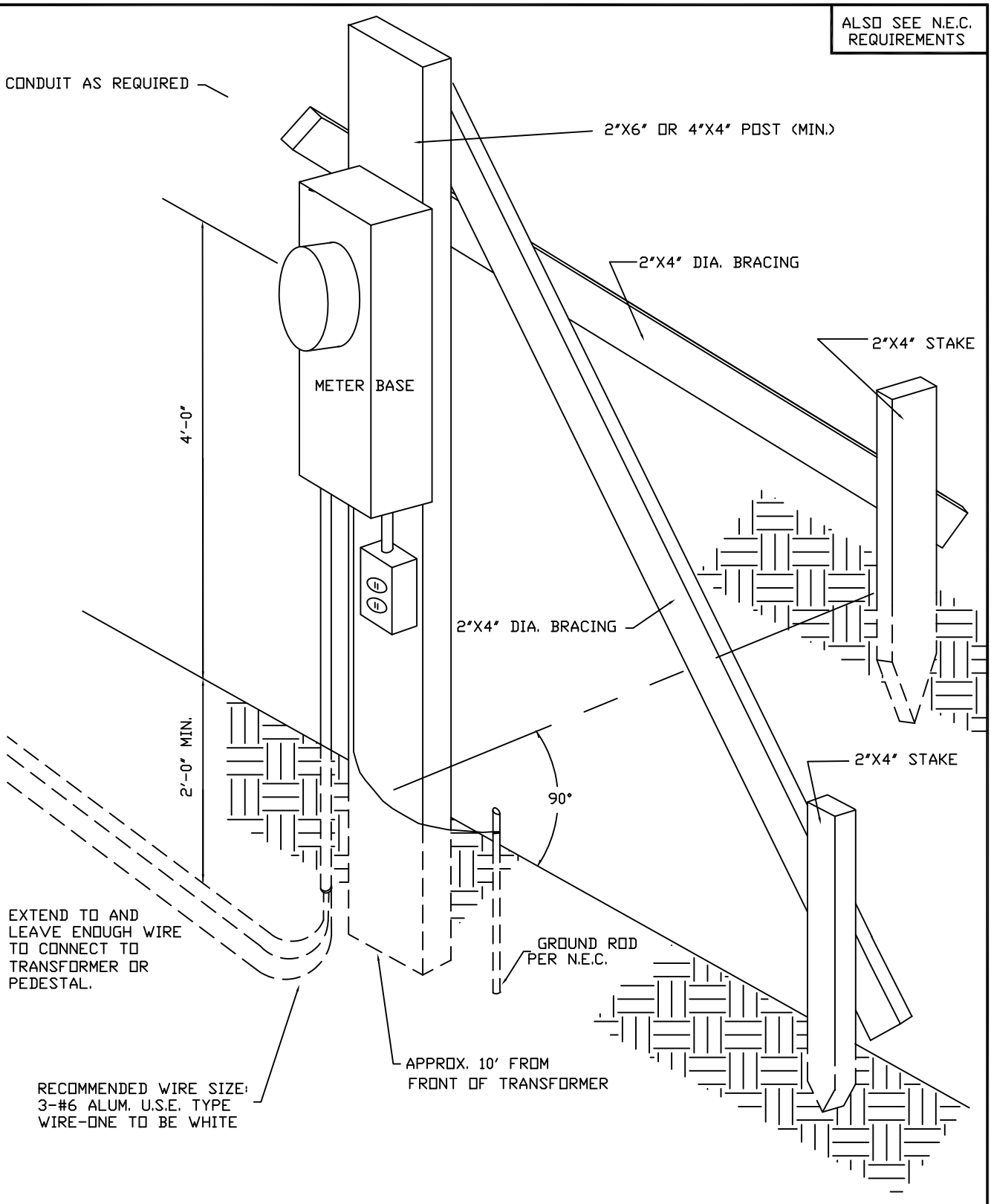

WEATHERPROOF 20A BREAKER (120 V SERVICE OR MEET STATE REQUIREMENT.) GROUND FAULT CIRCUIT INTERRUPTER REQUIRED.

DATE 9/27/93	SCALE NONE	ELECTRICAL SERVICE REQUIREMENTS SERVICE ASSEMBLY, UNDERGROUND TEMPORARY		
DRAWN KMD	REVISED 05/05/97 10/29/98 01/20/09 02/28/17			
APPROVED		CLALLAM COUNTY PUD #1	PAGE 10 OF 37	DRAWING # 10

H:\ENGSTANDRD\SPECS\SERV10

ALSO SEE N.E.C.

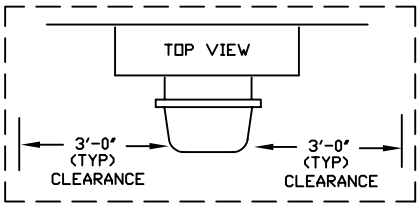

FLUSH MOUNT

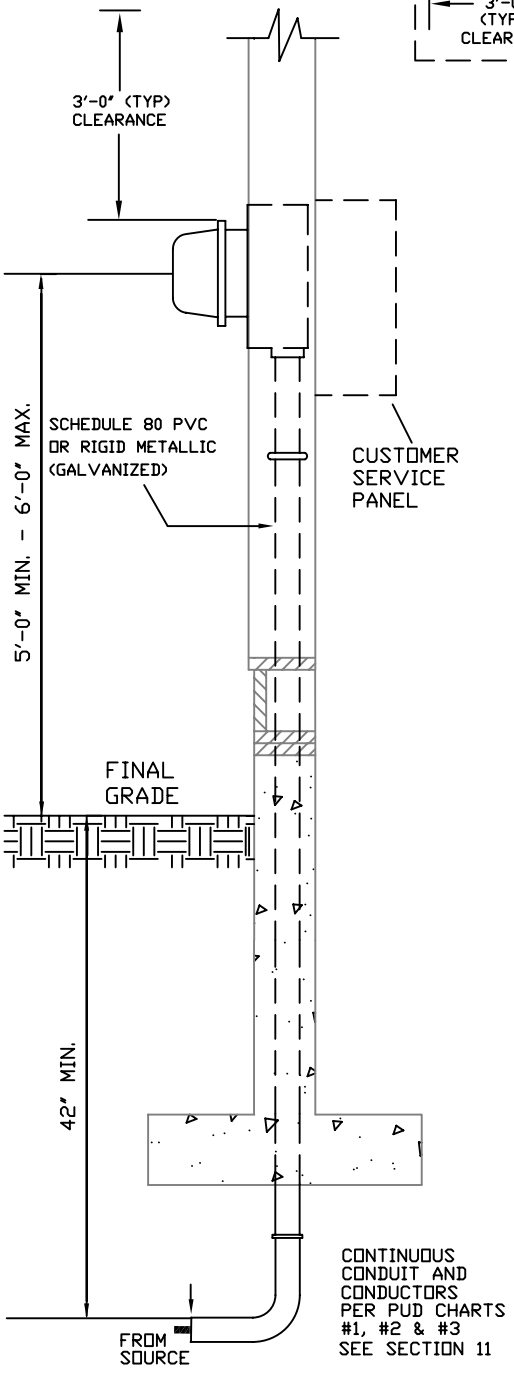

SURFACE MOUNT

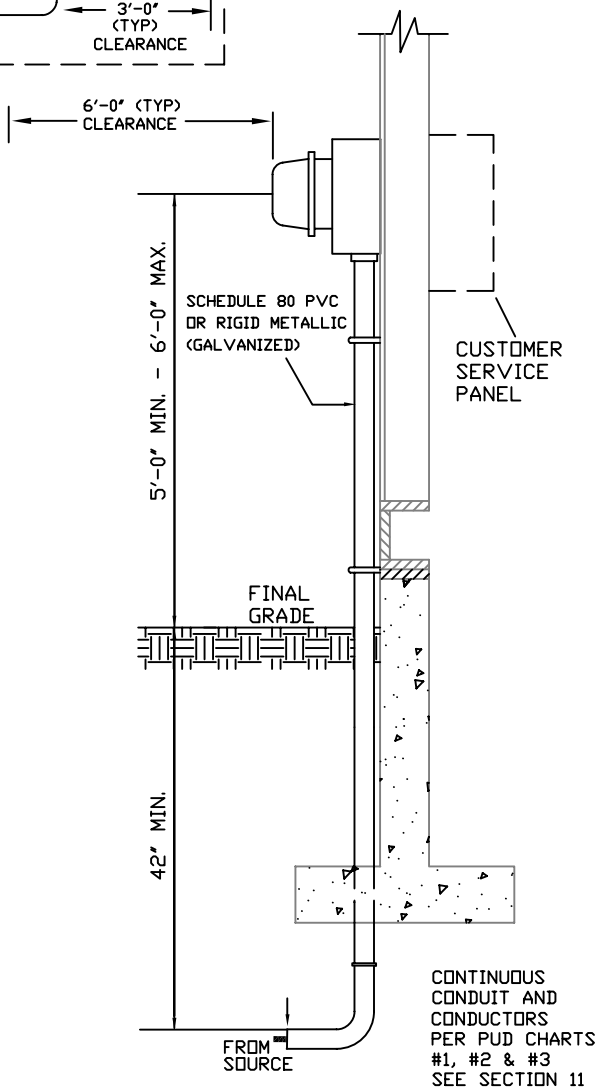

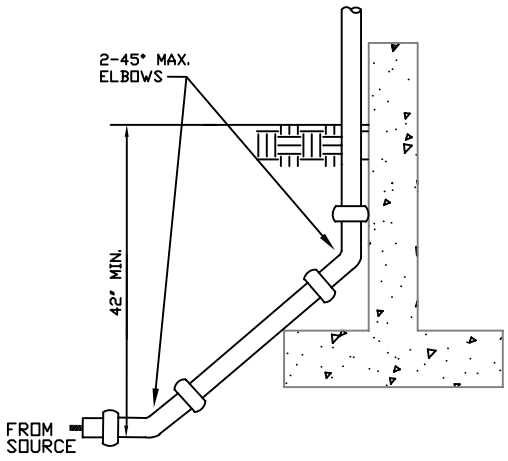

NOTES:
(1) SEE SECTION 11, CHART #1 & 2, FOR CONDUIT AND CONDUIT BEND REQUIREMENTS.
(2) GROUND RODS PER NEC REQUIREMENTS

DATE 9/27/93	SCALE NONE	ELECTRICAL SERVICE REQUIREMENTS METERING ASSEMBLY, WALL MOUNTED, SELF CONTAINED		
DRAWN KMD	REVISED 8/13/04 05/01/08 "ACCESS POLICY"			
APPROVED		CLALLAM COUNTY PUD #1	PAGE 11 OF 37	DRAWING # 11

H:\ENGSTANDRD\SPECS\SERV11

RECOMMENDED METER LOCATIONS

ALSO SEE N.E.C. REQUIREMENTS

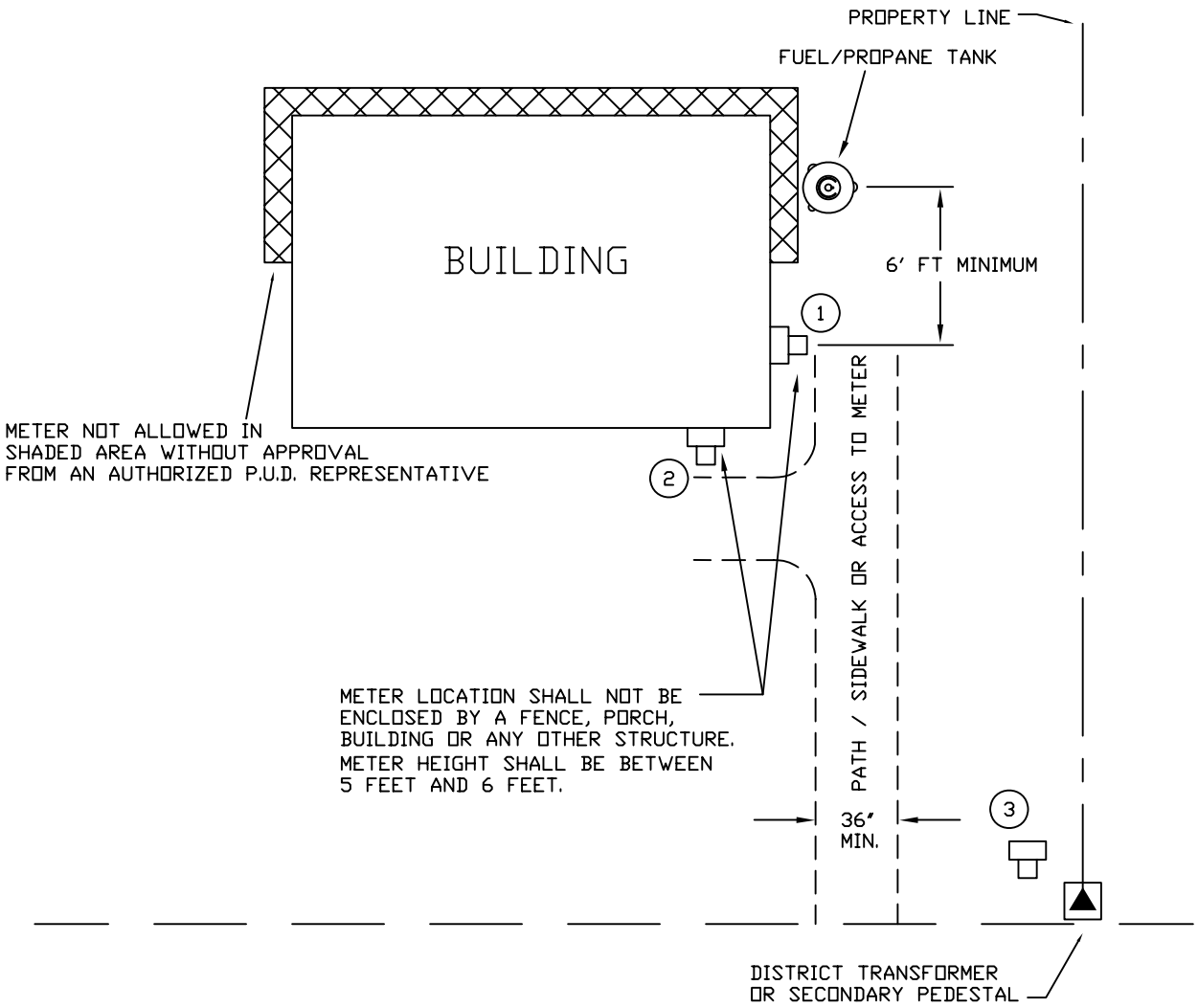

NOTES:

1. METER SITES #1, #2, AND #3 ARE RECOMMENDED METER LOCATIONS.
2. METER AT SITE #3 MUST BE A MINIMUM OF 5' FROM SIDE OF TRANSFORMER AND AT A HEIGHT OF BETWEEN 3 FEET AND 4 FEET.
3. THE CUSTOMER SHALL FURNISH A METER LOCATION ACCEPTABLE TO THE DISTRICT, READILY ACCESSIBLE WITHOUT RISK OF BODILY HARM TO DISTRICT EMPLOYEES.

DATE 8/23/93	SCALE NONE	ELECTRICAL SERVICE REQUIREMENTS METER LOCATION ON BUILDINGS		
DRAWN SMH/DT	REVISED 05/05/97 10/29/08 "ACCESS POLICY"	CLALLAM COUNTY PUD #1	PAGE 12 OF 37	DRAWING # 12
APPROVED				

ALSO SEE N.E.C. REQUIREMENTS

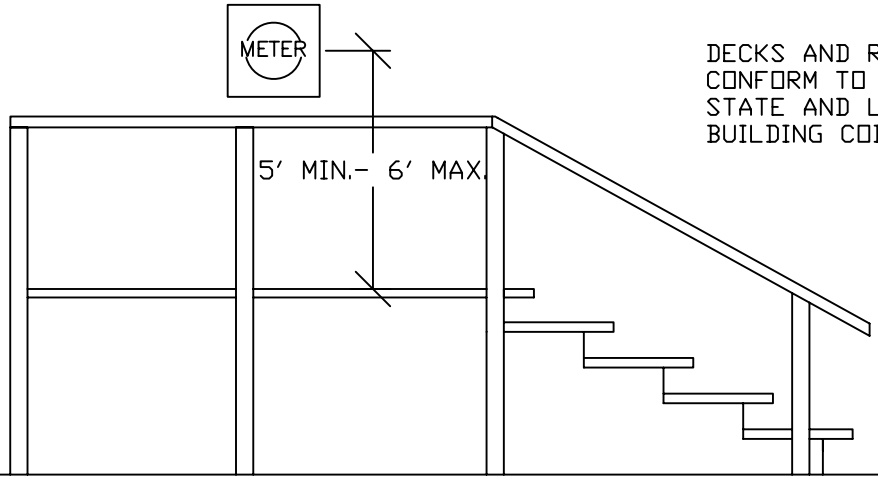

DECKS AND RAILING SHALL CONFORM TO ALL UBC, STATE AND LOCAL BUILDING CODES.

ELEVATION VIEW

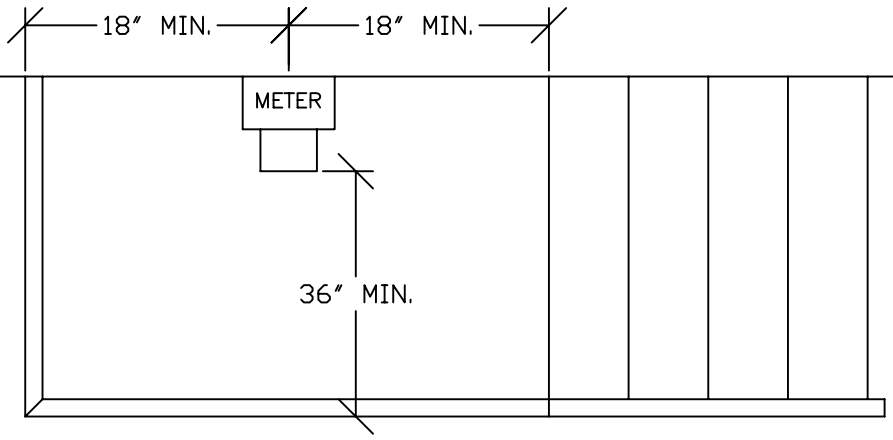

PLAN VIEW

DATE 9/27/93	SCALE NONE	ELECTRICAL SERVICE REQUIREMENTS PLATFORMS FOR ELEVATED METERS		
DRAWN KMD	REV: 05/22/08 "ACCESS PLAN"			
APPROVED		CLALLAM COUNTY PUD #1	PAGE 13 OF 37	DRAWING # 13

H:\ENGSTANDARDS\SERV13

ALSO SEE N.E.C. REQUIREMENTS

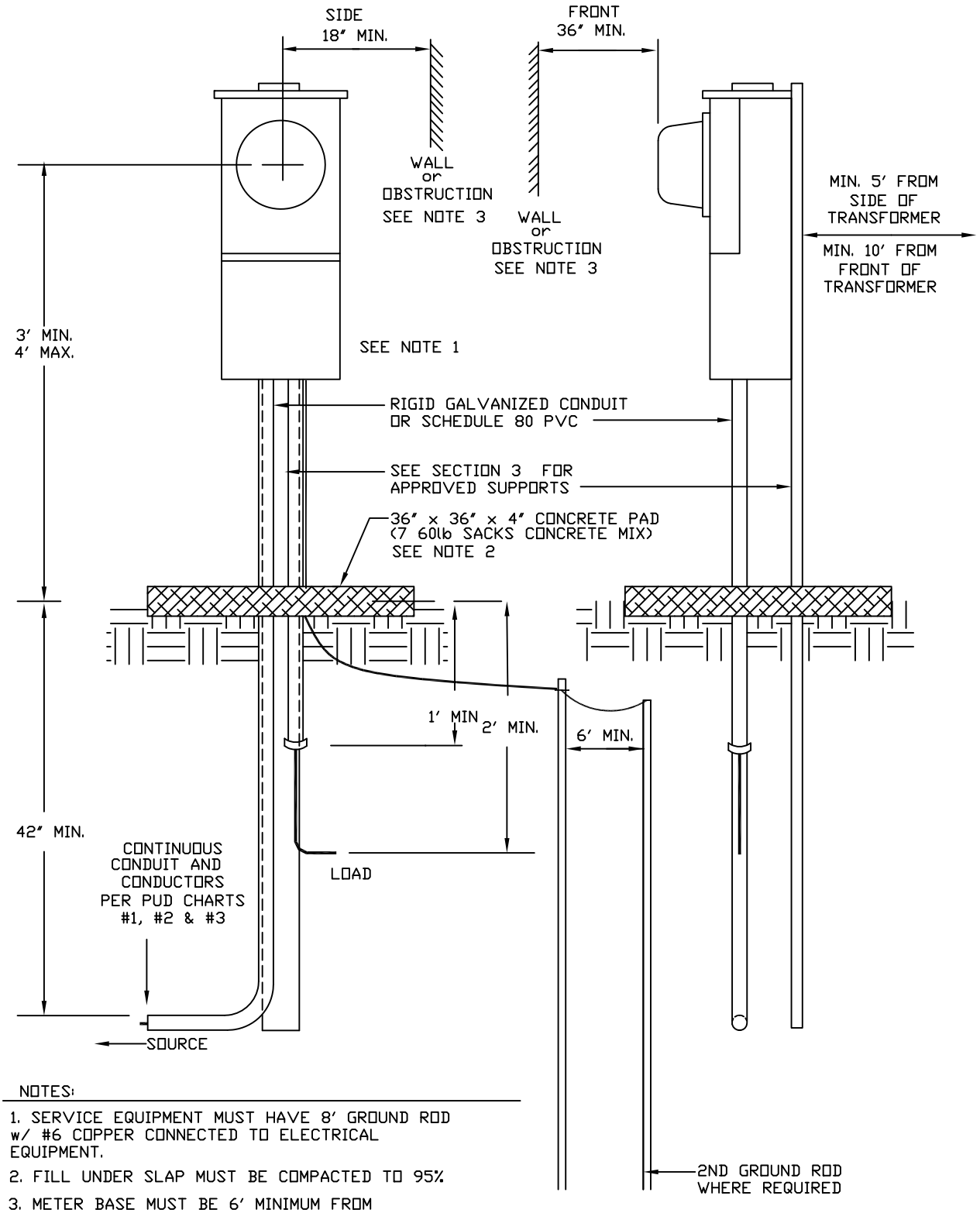

NOTES:

1. SERVICE EQUIPMENT MUST HAVE 8' GROUND ROD w/ #6 COPPER CONNECTED TO ELECTRICAL EQUIPMENT.
2. FILL UNDER SLAP MUST BE COMPACTED TO 95%
3. METER BASE MUST BE 6' MINIMUM FROM DISTRICT POLE.

DATE 7/19/93	SCALE NONE	ELECTRICAL SERVICE REQUIREMENTS METER PEDESTAL, SELF CONTAINED		
DRAWN SMH/DT	REVISED 10/29/98 12/20/08 "ACCESS POLICY" 08/14			
APPROVED		CLALLAM COUNTY PUD #1	PAGE 14 OF 37	DRAWING # 14

ALSO SEE N.E.C. REQUIREMENTS

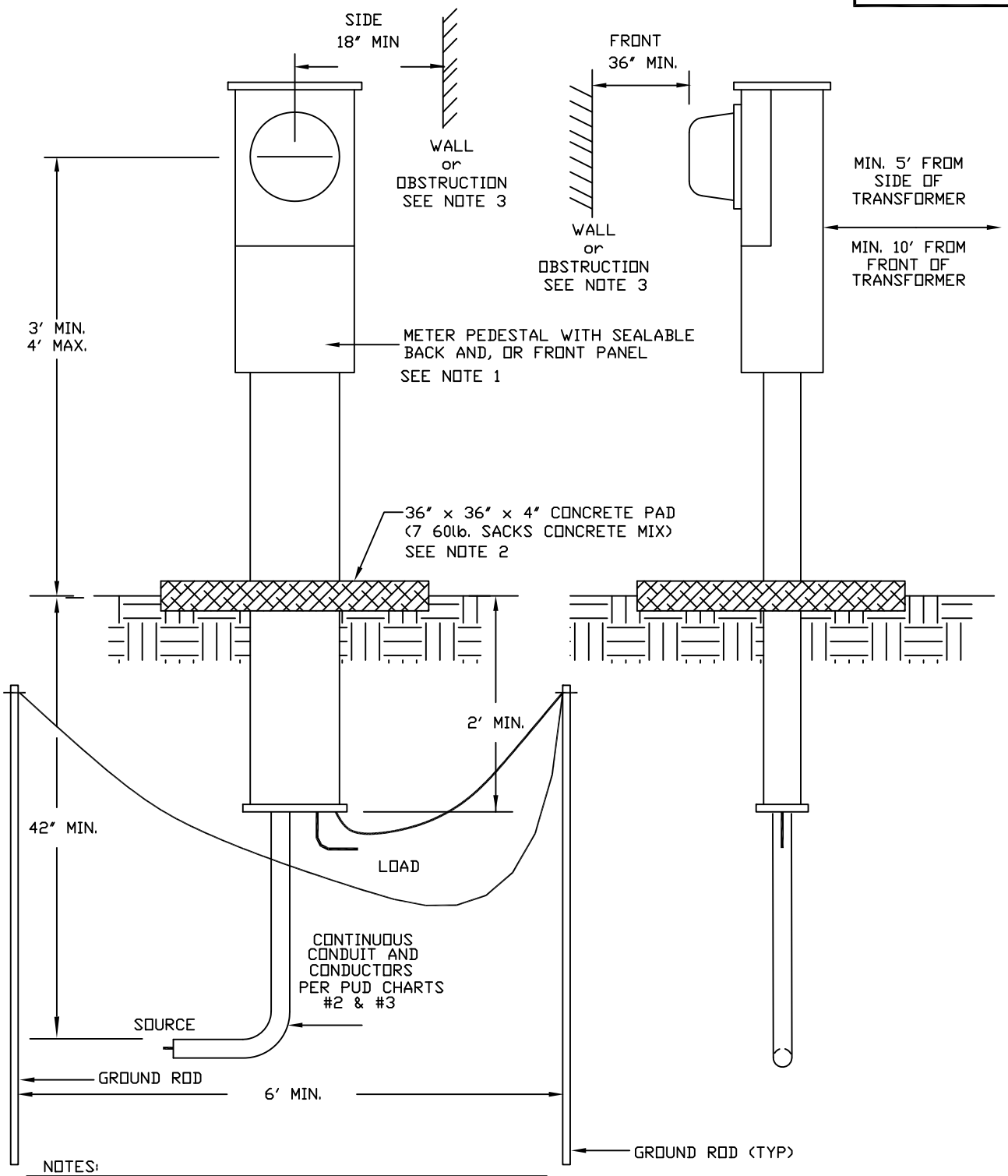

NOTES:

1. SERVICE EQUIPMENT MUST HAVE 8' GROUND ROD w/ #6 COPPER CONNECTED TO ELECTRICAL EQUIPMENT.
2. FILL UNDER SLAP MUST BE COMPACTED TO 95%
3. METER BASE MUST BE 6' MINIMUM FROM DISTRICT POLE.

DATE 7/19/93	SCALE NONE	ELECTRICAL SERVICE REQUIREMENTS METER PEDESTAL, MOBILE HOME		
DRAWN SMH / DT	REVISED 10/29/98 12/20/08 08/04/14			
APPROVED		CLALLAM COUNTY PUD #1	PAGE 15 OF 37	DRAWING # 15

H:\ENGSTANDRD\SPECS\SERV15

ALSO SEE N.E.C. REQUIREMENTS

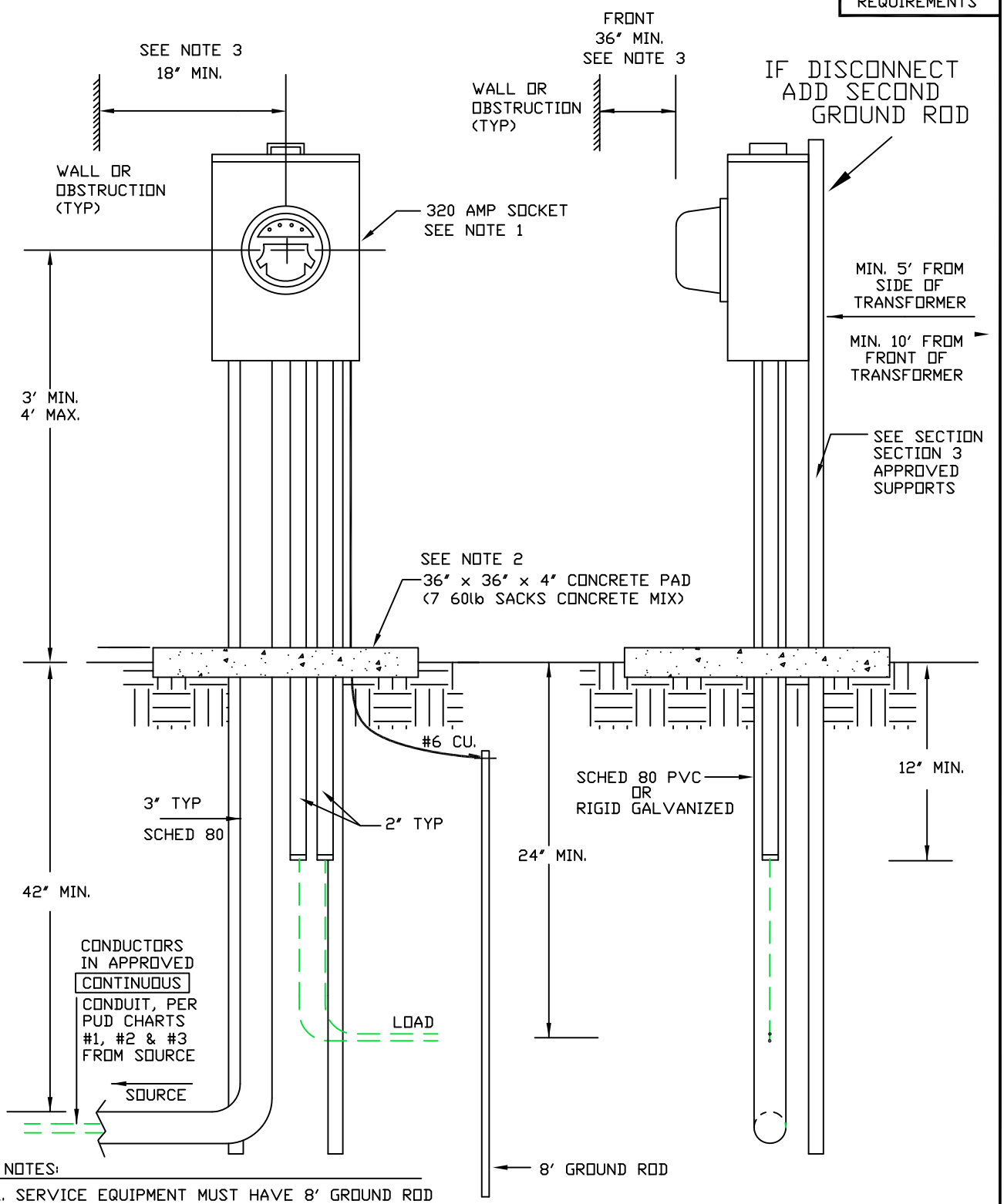

NOTES:

1. SERVICE EQUIPMENT MUST HAVE 8' GROUND ROD w/ #6 COPPER CONNECTED TO ELECTRICAL EQUIPMENT.
2. FILL UNDER SLAP MUST BE COMPACTED TO 95%
3. METER BASE MUST BE 6' MINIMUM FROM DISTRICT POLE.

DATE 11/30/95	SCALE NONE	ELECTRICAL SERVICE REQUIREMENTS METER PEDESTAL, 320 AMP SERVICE	
DRAWN KMD	REVISED 10/29/98 8/25/04 03/14/00 12/20/08 08/04/14		
APPROVED		CLALLAM COUNTY PUD #1	PAGE 16 OF 37 / DRAWING # 16

H:\ENGSTANDRD\SPEC\SERV16

ALSO SEE N.E.C. REQUIREMENTS

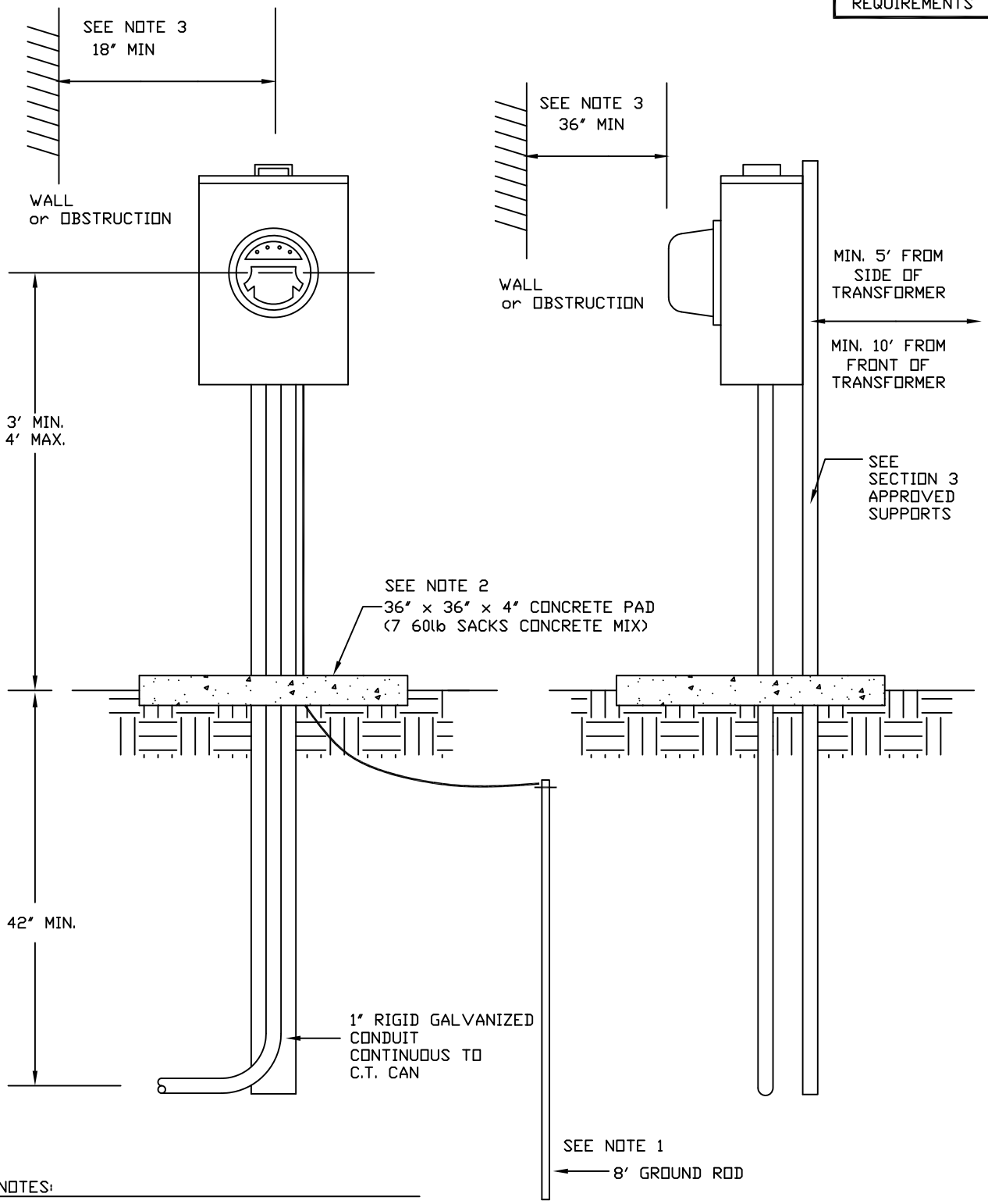

NOTES:

1. SERVICE EQUIPMENT MUST HAVE 8' GROUND ROD w/ #6 COPPER CONNECTED TO ELECTRICAL EQUIPMENT.
2. FILL UNDER SLAP MUST BE COMPACTED TO 95%
3. METER BASE MUST BE 6' MINIMUM FROM DISTRICT POLE.

DATE 7/19/93	SCALE NONE	ELECTRICAL SERVICE REQUIREMENTS METER PEDESTAL, C.T. METER		
DRAWN SMH/DT	REVISED 05/05/97 8/13/04 10/20/08 08/04/14	CLALLAM COUNTY PUD #1	PAGE 17 OF 37	DRAWING # 17
APPROVED				

H:\ENGSTANDRD\SPECS\SERV17

METER SOCKET CLIP ARRANGEMENT

ALSO SEE N.E.C. REQUIREMENTS

SINGLE PHASE		SELF CONTAINED			WITH CURRENT TRANSFORMERS		
VOLTAGE	WIRES	MAX. AMPS	# CLIPS	SOCKETS	# C.T.	# CLIPS	SOCKETS
120/208	3	200	5	B			
120/240	3	320	4	A	2	6	C/TEST SW.
480	3	200	4	A			
THREE PHASE							
208/120	4	200	7	D	3	13	E/TEST SW.
240	4	200	7	D	3	13	E/TEST SW.
480	4	200	7	D	3	13	E/TEST SW.
480/277	4	200	7	D	3	13	E/TEST SW.

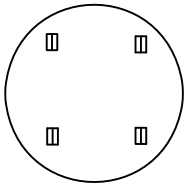

A

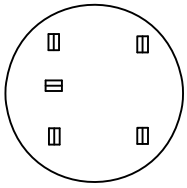

B

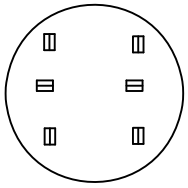

C

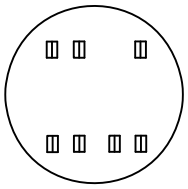

D

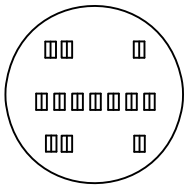

E

NOTE: ALL SOCKET-TYPE METERS SHALL BE FURNISHED WITH DISTRICT APPROVED SEALING RING.(SEE SECTION 3.6.9 OF THIS MANUAL FOR DETAIL)

DATE 4/20/21	SCALE NONE	ELECTRICAL SERVICE REQUIREMENTS METERS SOCKET CLIP ARRANGEMENT		
DRAWN XC	REVISED 10/29/98 11/29/14 4/20/21	CLALLAM COUNTY PUD #1	PAGE 18 OF 37	DRAWING # 18
APPROVED CY				

H:\ENGSTANDRD\SPECS\SERV18

ALSO SEE N.E.C. REQUIREMENTS

200A BY-PASS METER BASE

ENCLOSURE DEPTH = 4-1/2" MIN.

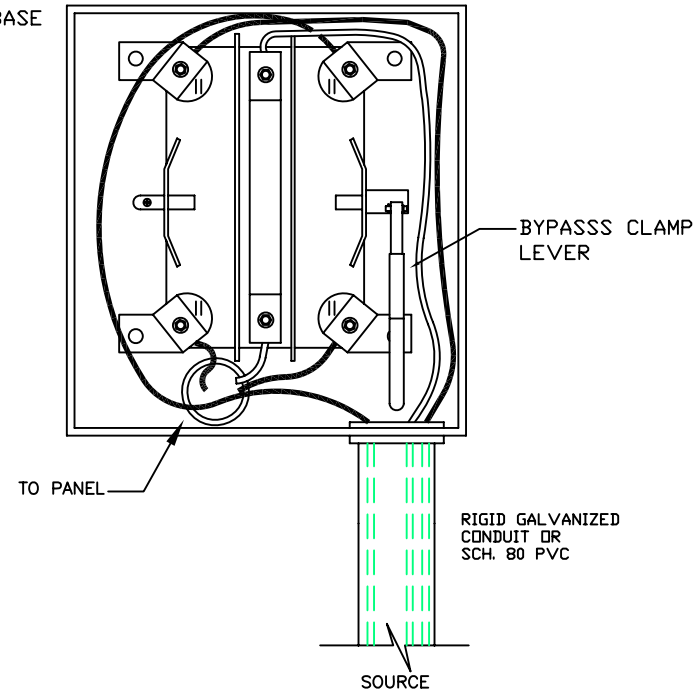

200A METER BASE

ENCLOSURE DEPTH = 4-1/2" MIN.

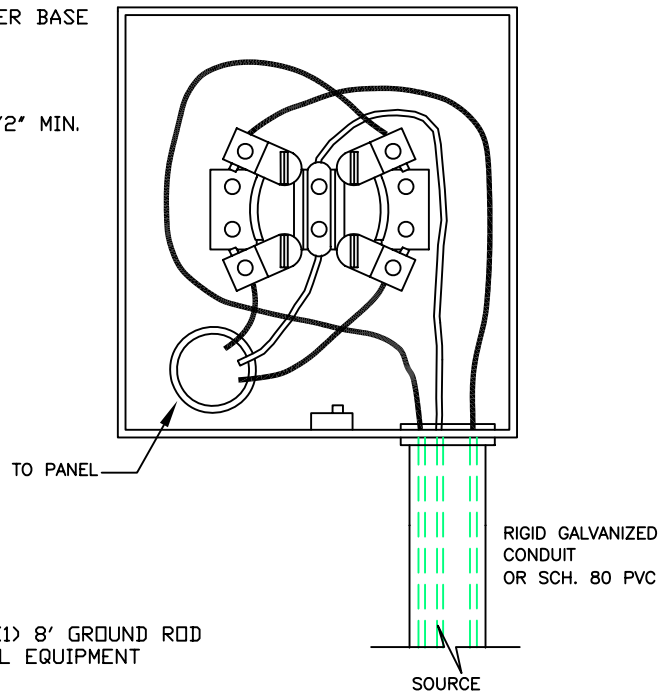

NOTE:
ALL METERS MUST HAVE A MINIMUM OF (1) 8' GROUND ROD W/#6 COPPER CONNECTED TO ELECTRICAL EQUIPMENT

DATE 12/86	SCALE NONE	ELECTRICAL SERVICE REQUIREMENTS METER SOCKET, 200 AMP, SINGLE PHASE		
DRAWN KMD	REVISED 09/24/93 10/11/04 05/05/97 02/27/98 03/28/98 10/29/98 10/20/08			
APPROVED		CLALLAM COUNTY PUD #1	PAGE 19 OF 37	DRAWING # 19

H:\ENGSTANDRD\SPECS\SERV19

ALSO SEE N.E.C. REQUIREMENTS

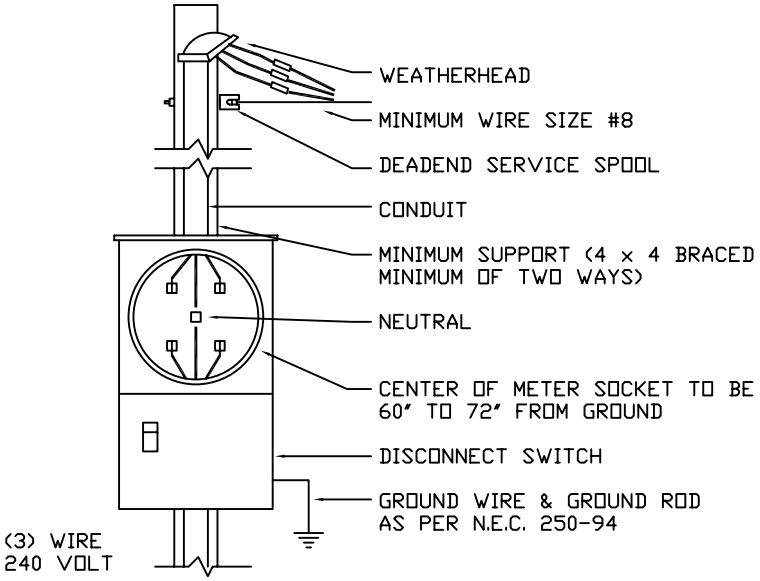

TEMPORARY

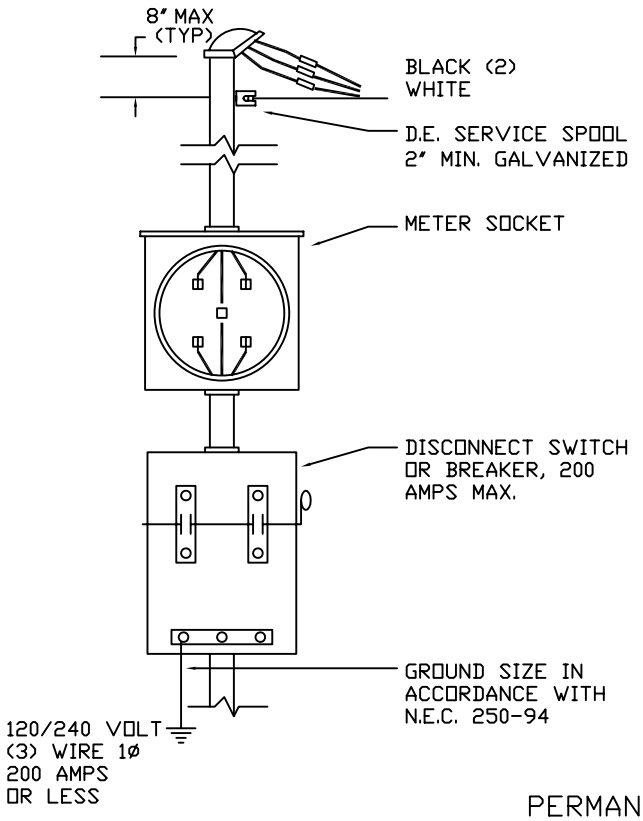

PERMANENT

NOTE
SERVICE EQUIPMENT MUST HAVE (2) 8' GROUND RODS (6' MIN SEPARATION) W/ #4 COPPER CONNECTED TO ELECTRICAL EQUIPMENT, AS PER N.E.C. 250-94

DATE 7/19/93	SCALE NONE	ELECTRICAL SERVICE REQUIREMENTS METERING - OVERHEAD SERVICE, 1-PHASE		
DRAWN SMH	REVISED 05/05/97 10/29/98 10/20/08	CLALLAM COUNTY PUD #1	PAGE 20 OF 37	DRAWING # 20
APPROVED				

ALSO SEE N.E.C. REQUIREMENTS

480/240 OR 240/120 VOLT
4 WIRE 3Ø
DELTA
SELF CONTAINED

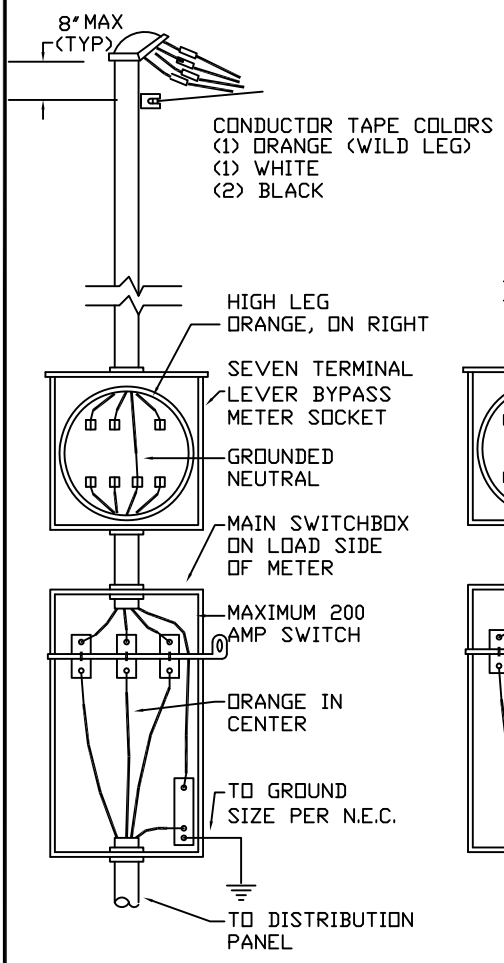

480/277 VOLT
4 WIRE 3Ø
WYE
SELF CONTAINED

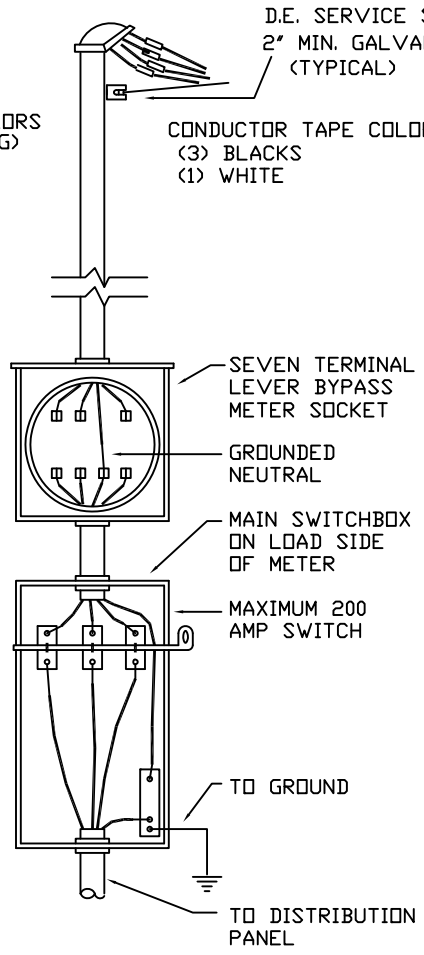

208/120
4 WIRE 3Ø
WYE
SELF CONTAINED

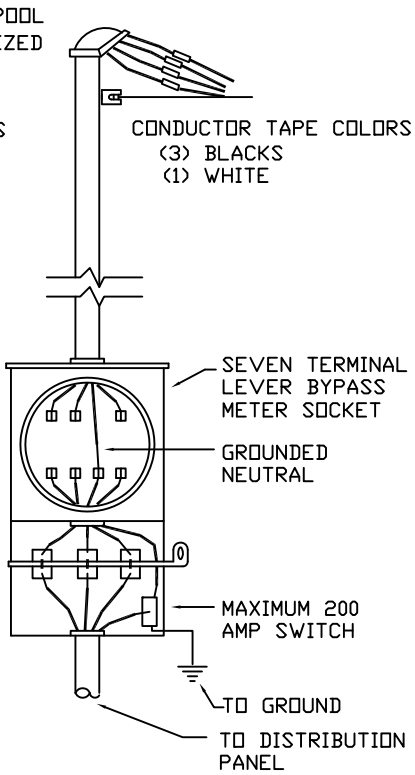

SEVEN TERMINAL LEVER BYPASS METER SOCKET

ALL METER BASES ARE 200 AMPS OR LESS

DATE 7/19/93	SCALE NONE	ELECTRICAL SERVICE REQUIREMENTS METERING - OVERHEAD SERVICE, 3-PHASE		
DRAWN SMH/DT	REVISED 10/29/98 8/13/04 11/29/08 08/04/14	CLALLAM COUNTY PUD #1	PAGE 21 OF 37	DRAWING # 21
APPROVED				

ALSO SEE N.E.C. REQUIREMENTS

NOTE: SEE PUD DRAWING 11 OR 16 FOR INSTALLATION

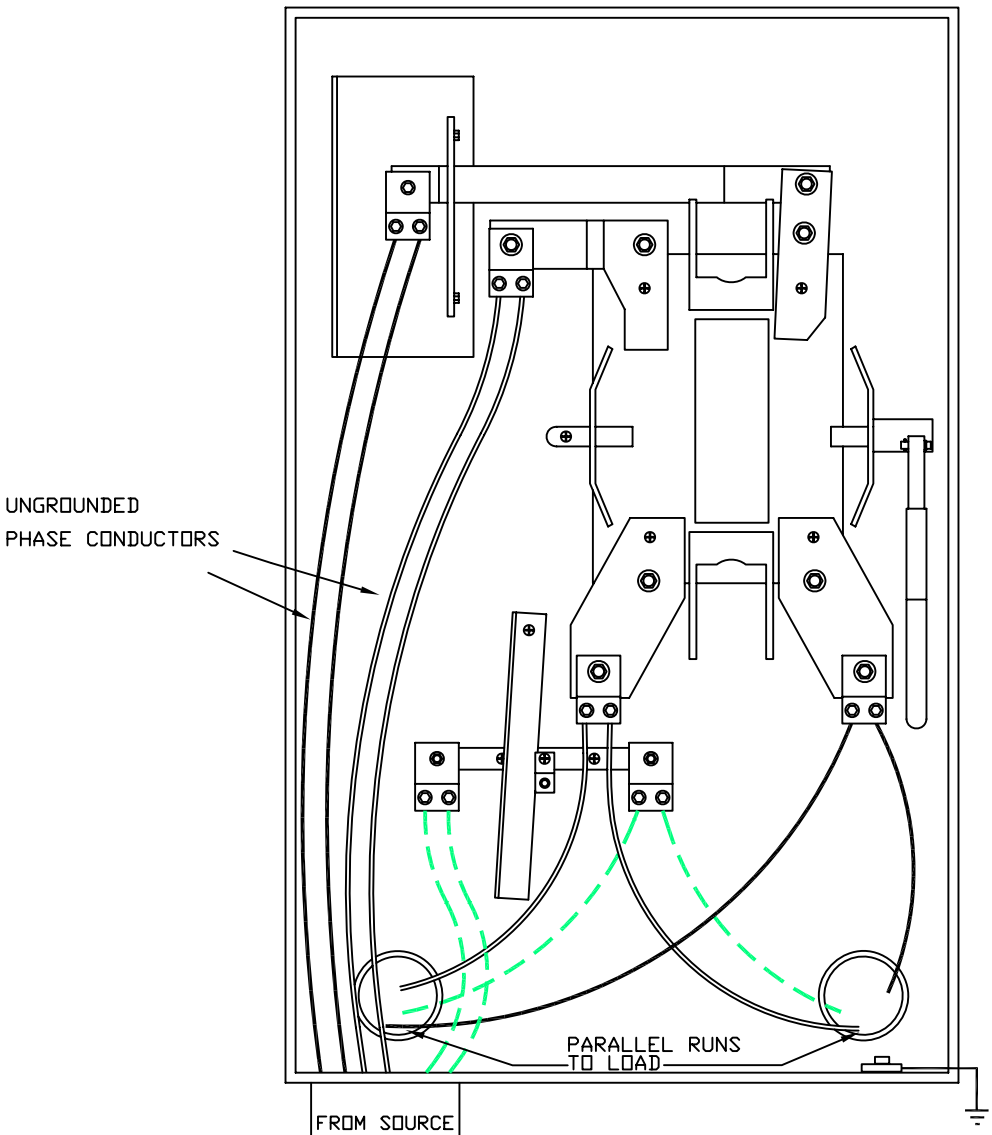

ONE SET PARALLEL CONDUCTORS
TO BE MARKED WITH RED TAPE
NEUTRAL TO BE MARKED WITH WHITE

DATE 12/13/94	SCALE NONE	ELECTRICAL SERVICE REQUIREMENTS TYPICAL 320 AMP LEVER TYPE BYPASS METER BASE (UNDERGROUND)		
DRAWN KMD	REVISED 05/05/97 8/13/04 10/29/98 04/20/04	CLALLAM COUNTY PUD #1	PAGE 22 OF 37	DRAWING # 22
APPROVED				

H:\ENGSTANDRD\SPECS\SERV22

ALSO SEE N.E.C. REQUIREMENTS

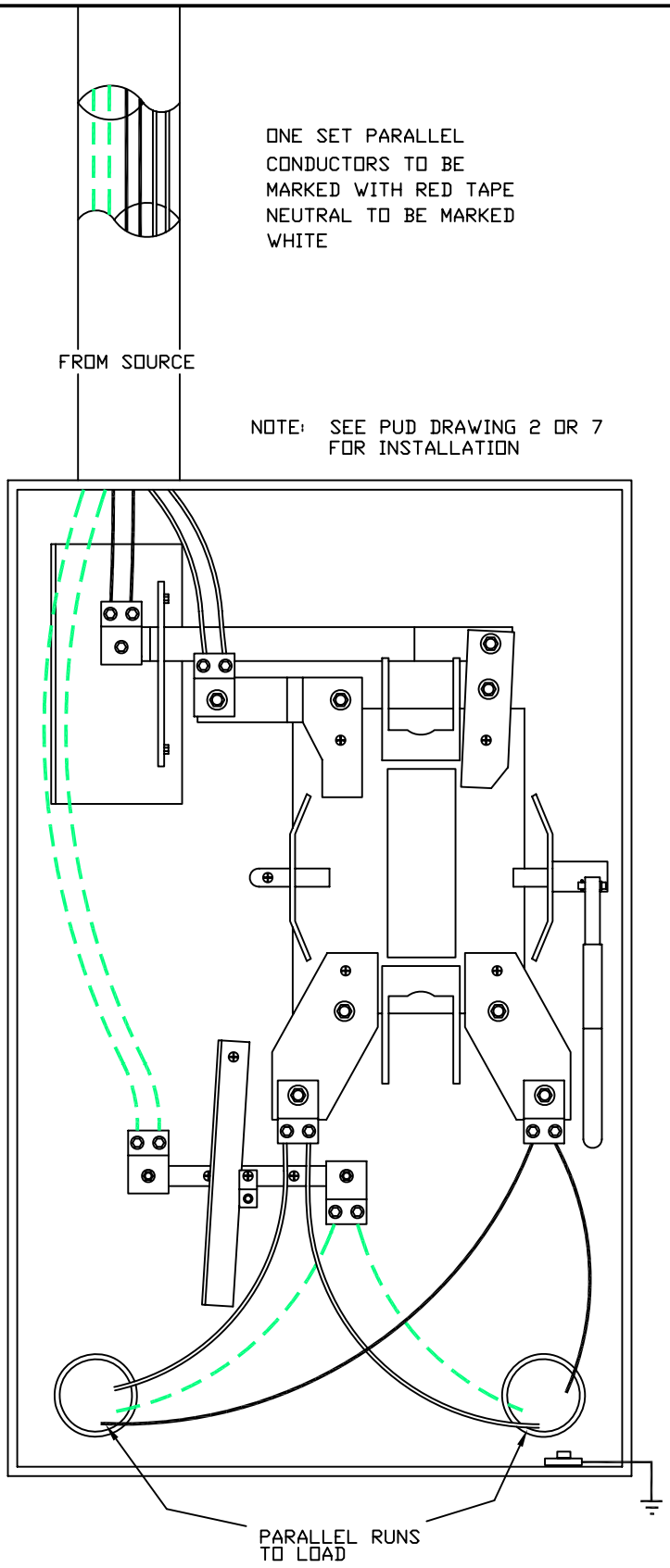

DATE 12/13/94	SCALE NONE	ELECTRICAL SERVICE REQUIREMENTS TYPICAL 320 AMP LEVER TYPE BYPASS METER BASE (OVERHEAD)		
DRAWN KMD	REVISED 05/05/97 8/13/04 10/29/98 12/20/08	CLALLAM COUNTY PUD #1	PAGE 23 OF 37	DRAWING # 23
APPROVED				

H:\ENGSTANDARD\SPECS\SERV23

ALSO SEE N.E.C. REQUIREMENTS

TYPICAL 208/120V 3Ø 4 WIRE TO SERVE MULTIPLE OCCUPANCY

(ALL SERVICES UNDER 200A)

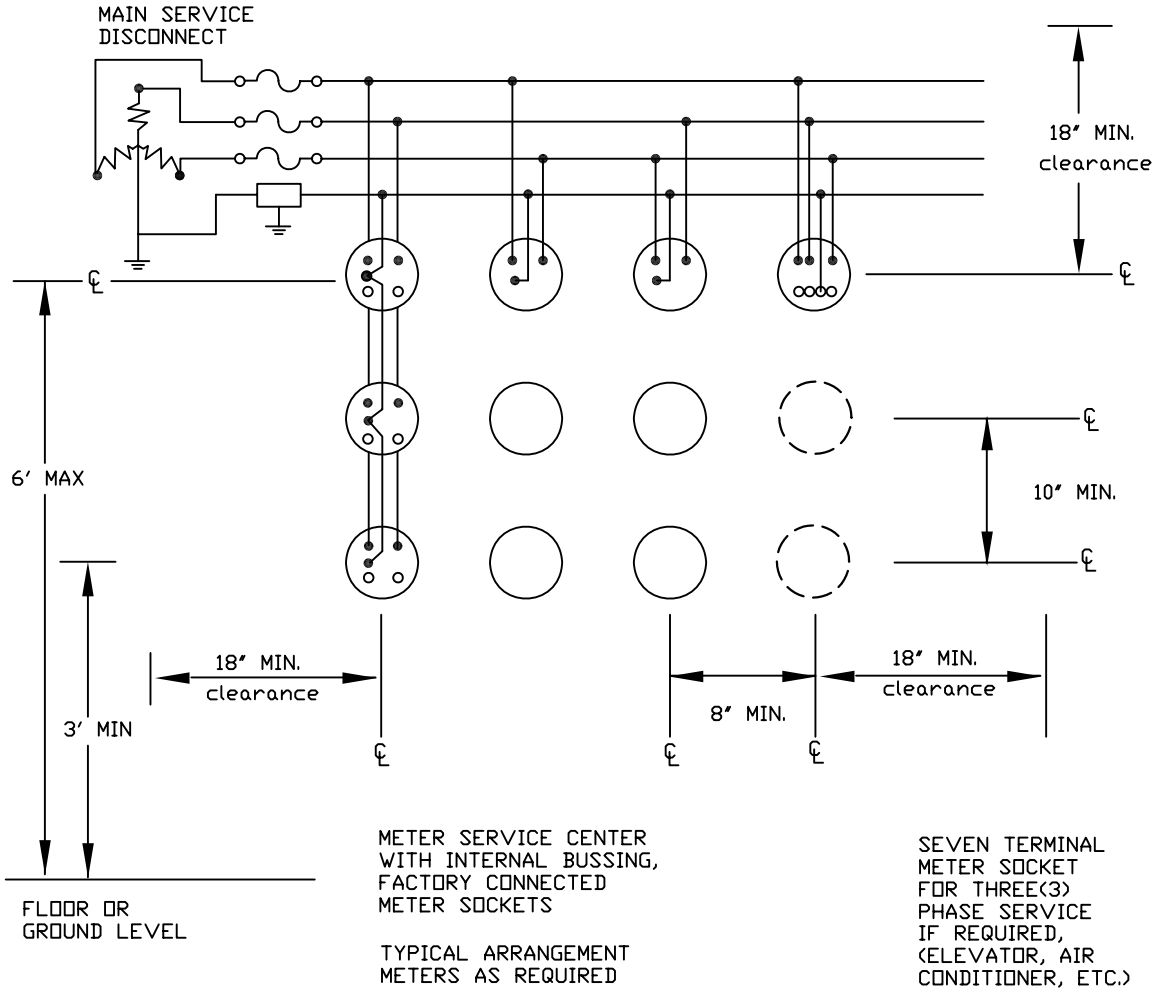

NOTES:

* 208/120 VOLT THREE(3) WIRE SINGLE PHASE METER SOCKET TO BE FIVE(5) TERMINAL LOCATED ON LEFT SIDE FACING METER.
* ALL LOAD TO BE BALANCED BETWEEN PHASES. (+ OR -10% OF NOMINAL AVERAGE LOAD)
* LOAD CENTER MAY BE TOP OR BOTTOM CONNECTED.
* LOAD CENTER TO BE APPROVED BY THE DISTRICT BEFORE BEING INSTALLED
* NON-SHUNTING TYPE METER SOCKETS.
* ALL METERS SHALL BE IDENTIFIED WITH A PERMANENT TYPE LABEL AS TO LOCATION OF SERVICE. SEE REQUIREMENTS SECTION 1.5.1, 1.5.2
* MIN. SOCKET CENTER SEPARATION=8" HORIZ. AND 10" VERT.

DATE 9/16/93	SCALE NONE	ELECTRICAL SERVICE REQUIREMENTS 208/120 3Ø 4-WIRE TO SERVE MULTIPLE OCCUPANCY		
DRAWN KMD	REVISED 05/05/97 10/29/98 12/20/08	CLALLAM COUNTY PUD #1	PAGE 24 OF 37	DRAWING # 24
APPROVED				

H:\ENGSTANDRD\SPECS\SERV24

ALSO SEE N.E.C. REQUIREMENTS

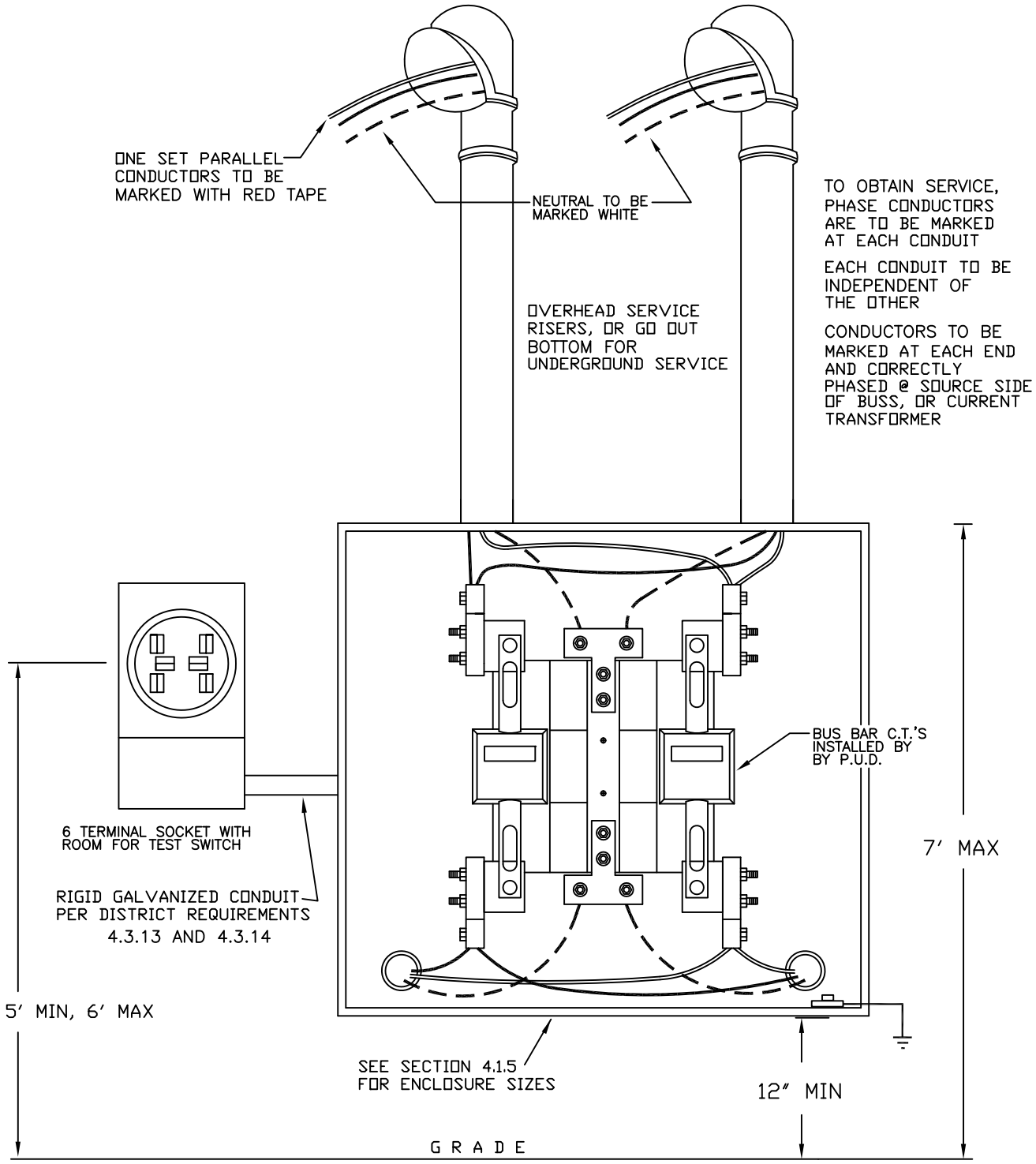

NOTES:

* ALL OUTDOOR ENCLOSURE MUST HAVE THE GROUND ROD INSTALLED AT THE ENCLOSURE LOCATION & CONNECTED TO ELECTRICAL EQUIPMENT
* NO SPLICES IN C.T. ENCLOSURES

DATE 12/12/94	SCALE NONE	ELECTRICAL SERVICE REQUIREMENTS CT ENCLOSURE WIRING, SINGLE-PHASE, 400 - 800 AMP, OVERHEAD		
DRAWN KMD	REVISED 09/04/96 8/13/04 05/05/97 10/29/98 10/21/08 11/21/14	CLALLAM COUNTY PUD #1	PAGE 25 OF 37	DRAWING # 25
APPROVED				

H:\ENGSTANDARD\SPECS\SERV25

ALSO SEE N.E.C. REQUIREMENTS

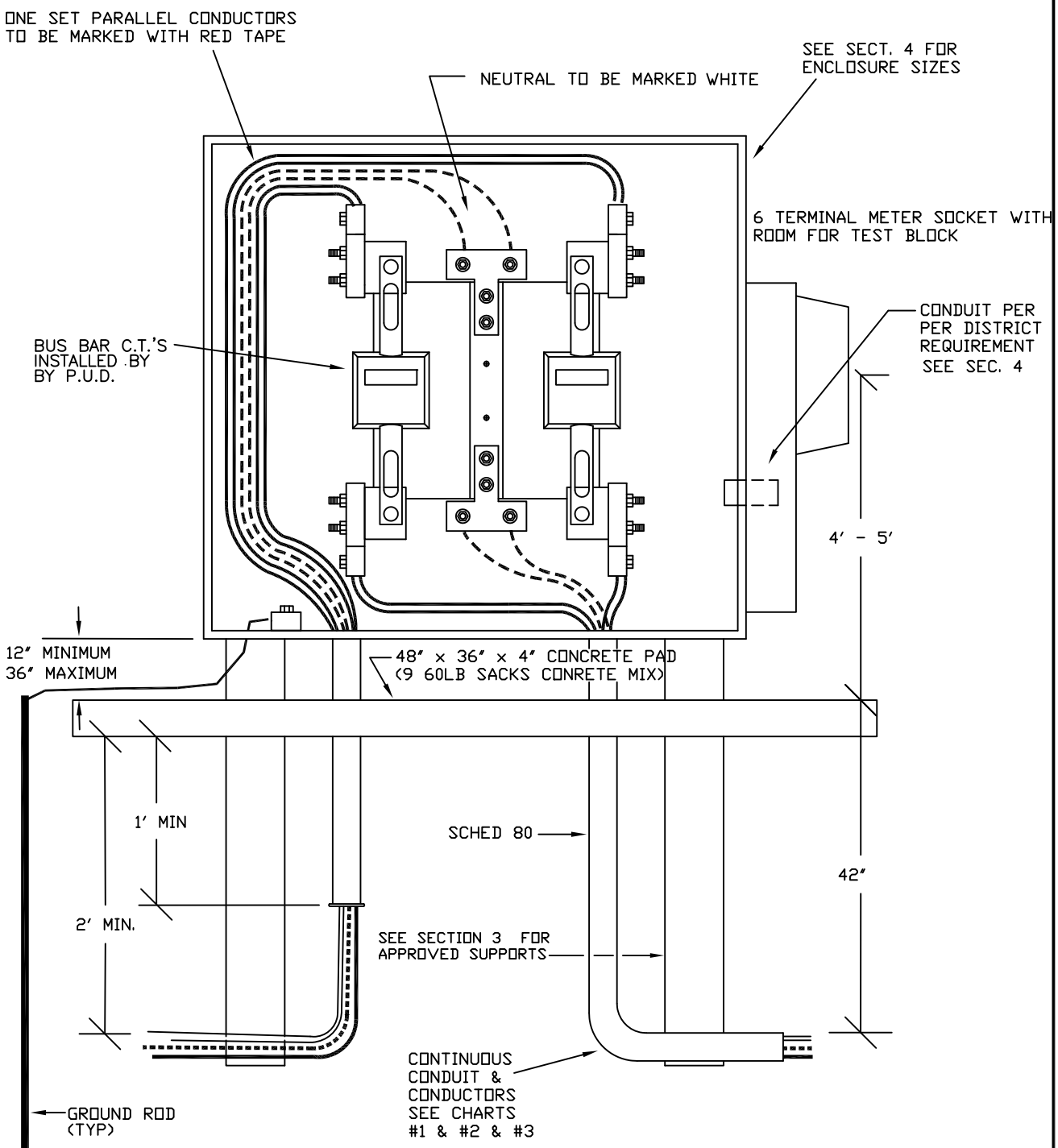

NOTES:

* ALL OUTDOOR ENCLOSURES MUST HAVE (1) 8' GROUND ROD WITH #6 COPPER CONNECTED TO ELECTRICAL EQUIPMENT.
* TO OBTAIN SERVICE, PHASE CONDUCTORS ARE TO BE MARKED AT EACH CONDUIT. EACH CONDUIT TO BE INDEPENDENT OF THE OTHER.
* NO SPLICES IN C.T. ENCLOSURE
* FILL UNDER SLAB MUST BE COMPACTED TO 95%
* SOURCE AND LOAD CONDUCTORS MUST BE CLEARLY IDENTIFIED AND TAGGED AT EACH LANDING PAD CONNECTION.

DATE 09/03/96	SCALE NONE	ELECTRICAL SERVICE REQUIREMENTS C.T. ENCLOSURE WIRING, SINGLE PHASE, 400 - 800 AMP, URD		
DRAWN KMD	REVISED 03/14/00 8/26/04 10/20/08 08/16/14			
APPROVED		CLALLAM COUNTY PUD #1	PAGE 26 OF 37	DRAWING # 26

ALSO SEE N.E.C. REQUIREMENTS

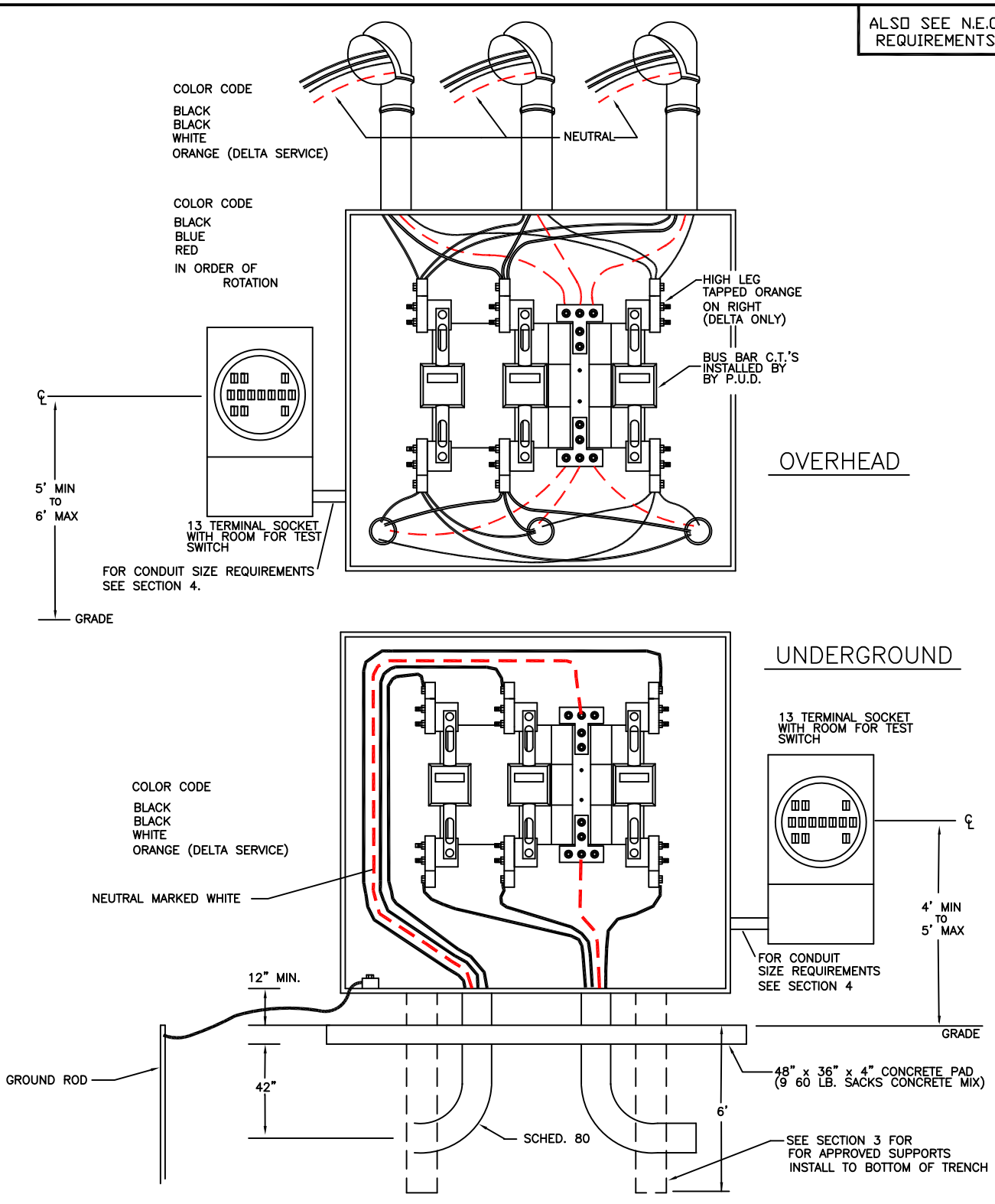

NOTES:

* ALL OUTDOOR ENCLOSURES MUST HAVE A GROUND ROD INSTALLED AT THE ENCLOSURE & CONNECTED TO ELECTRICAL EQUIPMENT.
* NO SPLICES IN C.T. ENCLOSURE
* SEE 4.1.5 FOR ENCLOSURE SIZE
* SOURCE AND LOAD CONDUCTORS MUST BE CLEARLY IDENTIFIED AND TAGGED AT EACH LANDING PAD CONNECTION.

DATE 12/14/94	SCALE NONE	ELECTRICAL SERVICE REQUIREMENTS CT ENCLOSURE WIRING, THREE-PHASE, 400-800 AMP		
DRAWN KMD/DT	REVISED 10/29/98 10/11/04 04/20/04			
APPROVED	10/25/08 08/04/14	CLALLAM COUNTY PUD #1	PAGE 27 OF 37	DRAWING # 27

H:\ENGSTANDRD\SPECS\SERV27

ALSO SEE N.E.C. REQUIREMENTS

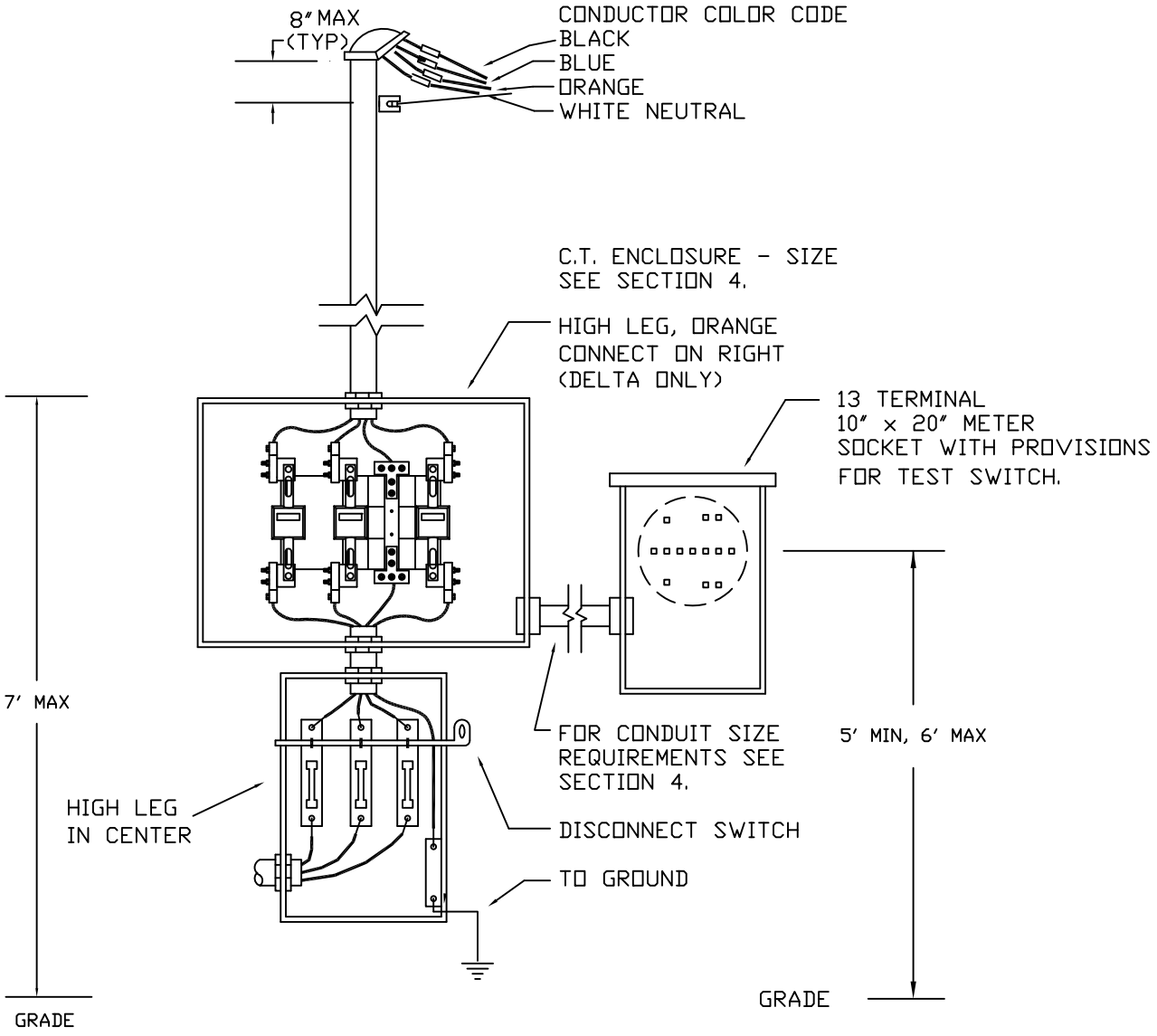

4 WIRE 3Ø

3Ø CURRENT TRANSFORMER METERING, OUTSIDE ONLY

NOTES:

* SERVICE EQUIPMENT MUST HAVE (2) 8' GROUND RODS (6' MIN SEPARATION w/ COPPER GROUND LEADS CONNECTED TO ELECTRICAL EQUIPMENT AS PER NEC.
* BOND TO CT ENCLOSURE
* FOR UNDERGROUND SERVICE MOUNT SIMILAR TO DRAWING #26 CONNECT CONDUIT TO BOTTOM

DATE 7/19/93	SCALE NONE	ELECTRICAL SERVICE REQUIREMENTS METERING, OVERHEAD SERVICE, 3-PHASE, C.T. 400 to 800 Amp		
DRAWN SMH	REVISED 05/05/97 8/13/04 10/29/08 10/11/04 08/04/14	CLALLAM COUNTY PUD #1	PAGE 28 OF 37	DRAWING # 28
APPROVED				

ALSO SEE N.E.C. REQUIREMENTS

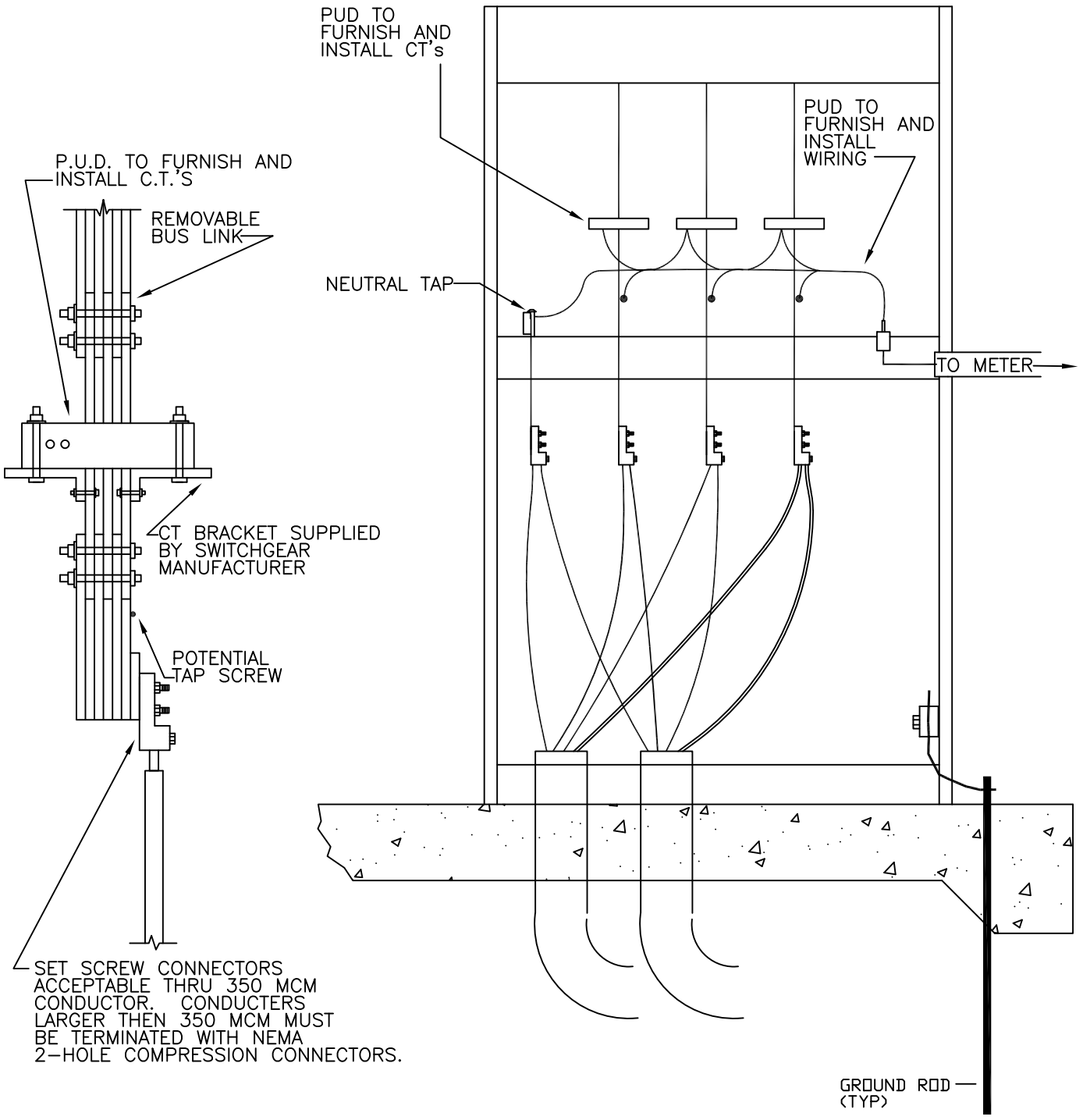

DATE 12/29/94	SCALE NONE	ELECTRICAL SERVICE REQUIREMENTS: TYPICAL SWITCH GEAR METERING, UNDERGROUND SERVICE, 3-PHASE, C.T., LARGER THAN 800A		
DRAWN XC	REVISED 10/29/98 04/20/04 01/11/21			
APPROVED CY		CLALLAM COUNTY PUD #1	PAGE 29 OF 38	DRAWING # 29A

H:\ENGSTANDRD\SPECS\SERV29A

ALSO SEE N.E.C. REQUIREMENTS

EXTERIOR SWITCHGEAR WITH METER MOUNTED NEXT TO CABINET

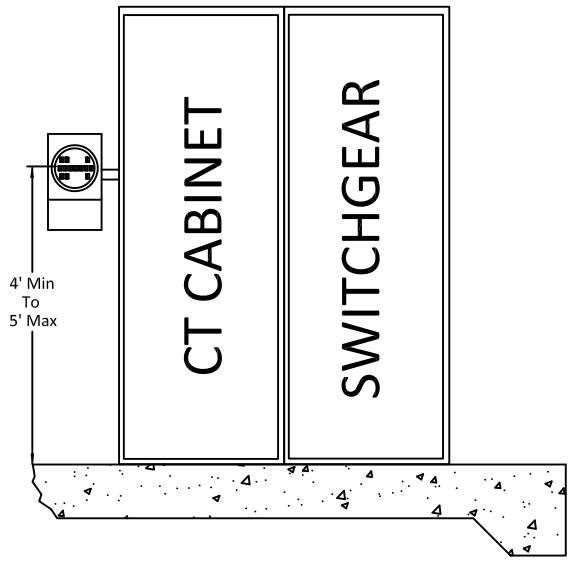

INTERIOR SWITCHGEAR WITH METER MOUNTED OUTSIDE

*REQUIRES ACCESS TO CT CABINET AT ALL TIMES
*LOCK BOX REQUIRED FOR ENTRY.

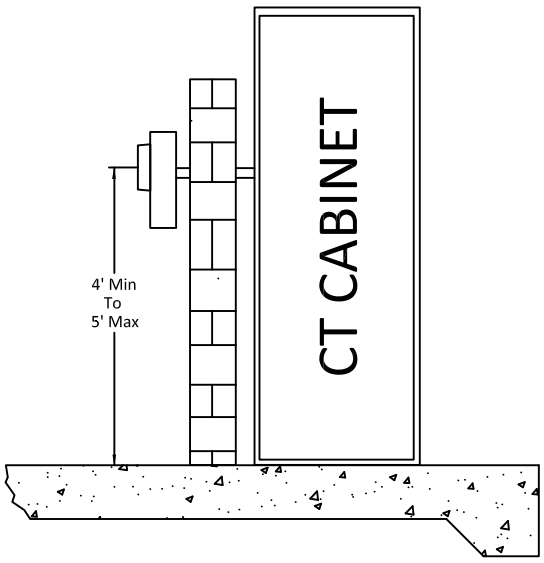

EXTERIOR SWITCHGEAR WITH METER MOUNTED TO CABINET

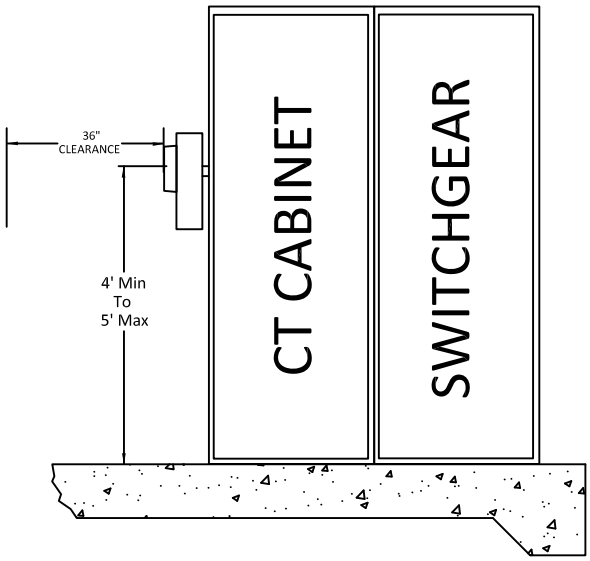

NOTES:

- SEE DRAWING #18 FOR METER BASE REQUIREMENTS
- SOURCE AND LOAD CONDUCTORS MUST BE CLEARLY IDENTIFIED AND TAGGED AT EACH LANDING PAD CONNECTION
- METER BASE TO BE MOUNTED SEPARATE FROM SWITCH GEAR
- CONDUIT SIZES MUST BE IN ACCORDANCE WITH THE NEC
- TEST SWITCHES PROVIDED BY PUD
- METER BASE TO BE SUPPLIED BY CONTRACTOR
- CT'S ARE SUPPLIED BY THE PUD

DATE 01/11/21	SCALE NONE	ELECTRICAL SERVICE REQUIREMENTS: TYPICAL SWITCH GEAR METERING, UNDERGROUND SERVICE, 3-PHASE, C.T., LARGER THAN 800A		
DRAWN XC	REVISED			
APPROVED CY		CLALLAM COUNTY PUD #1	PAGE 30 OF 38	DRAWING # 29B

H:\ENGSTANDRD\SPECS\SERV29B

ALSO SEE N.E.C. REQUIREMENTS

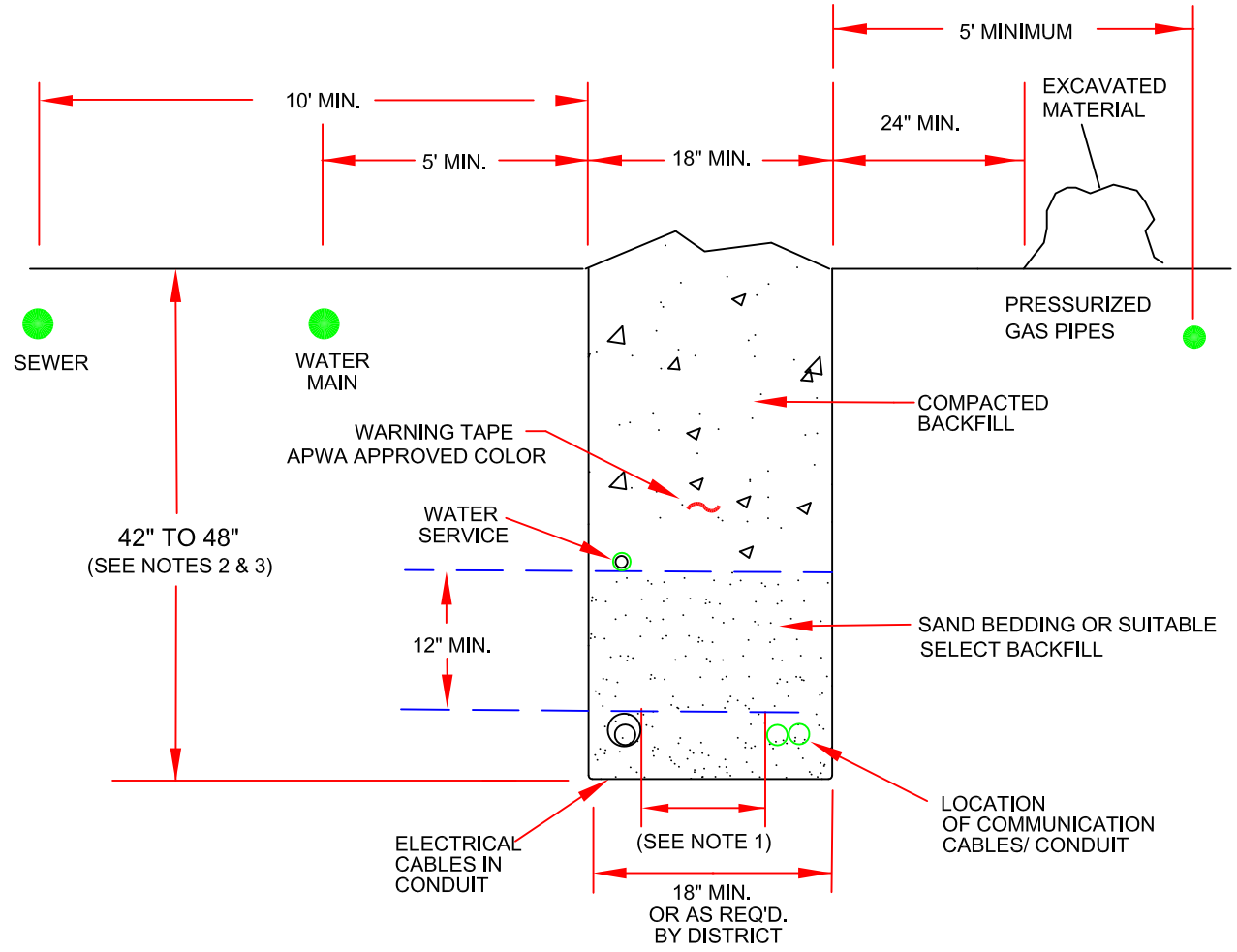

PRIMARY OR SERVICE TRENCH

NOTES:

1. 12–INCH MINIMUM RADIAL SEPARATION IS REQUIRED EXCEPT WHERE RANDOM SEPARATION IS PERMITTED IN ACCORDANCE WITH NESC SECTION 354.

2. AN EXCEPTION TO MINIMUM TRENCH DEPTH MAY BE PERMITTED BY AUTHORIZED PERSONNEL DUE TO OBSTRUCTIONS OR ROCK SUBGRADE. IF DEPTH OF CONDUIT COVER IS LESS THAN 30–INCHES, THE CONDUIT SHALL BE PROTECTED BY A 6–INCH MINIMUM CONCRETE CAP AS SHOWN. (SEE DETAIL A & NOTE 4)

3. SEE WAC 296–155–657 FOR EXCAVATION, TRENCHING AND SHORING REQUIREMENTS.

4. MINIMUM 2,500 PSI STRENGTH CONCRETE WITH RED DYE IDENTIFIER TO A DEPTH OF 1–INCH AND/OR WARNING TAPE LOCATED ALONG TRENCH CENTERLINE, 12–INCHES ABOVE CONCRETE. (SEE DETAIL A)

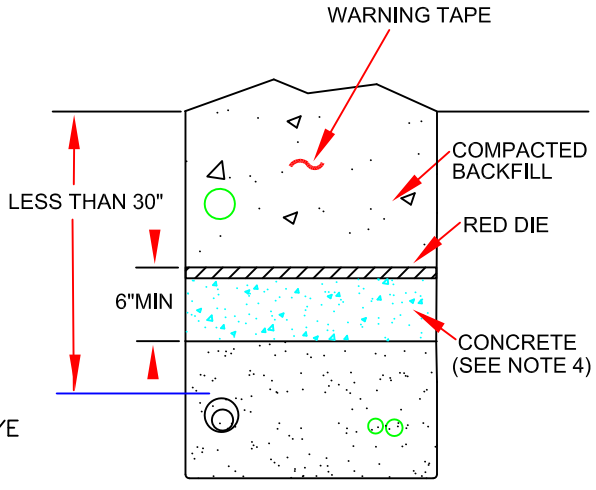

DETAIL A

DATE 9/24/93	SCALE NONE	ELECTRICAL SERVICE REQUIREMENTS TRENCH REQUIREMENTS, DEPTH, WIDTH, CLEARANCES		
DRAWN KMD	REVISED 10/30/98 8/13/04 04/20/04 9/13/07 08/04/14			
APPROVED		CLALLAM COUNTY PUD #1	PAGE 30 OF 37	DRAWING # 30

H:\ENGSTANDARD\SPECS\SRVC REGS

ALSO SEE N.E.C. REQUIREMENTS

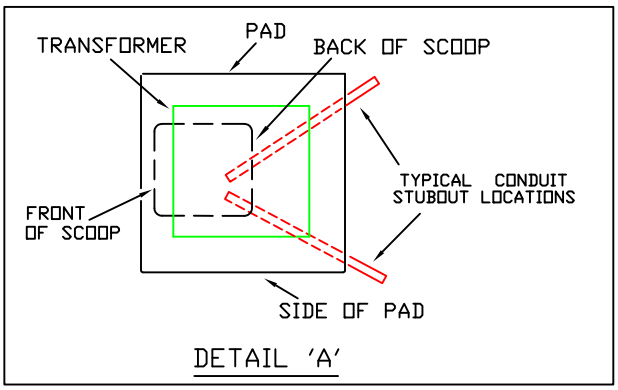

DETAIL 'A'

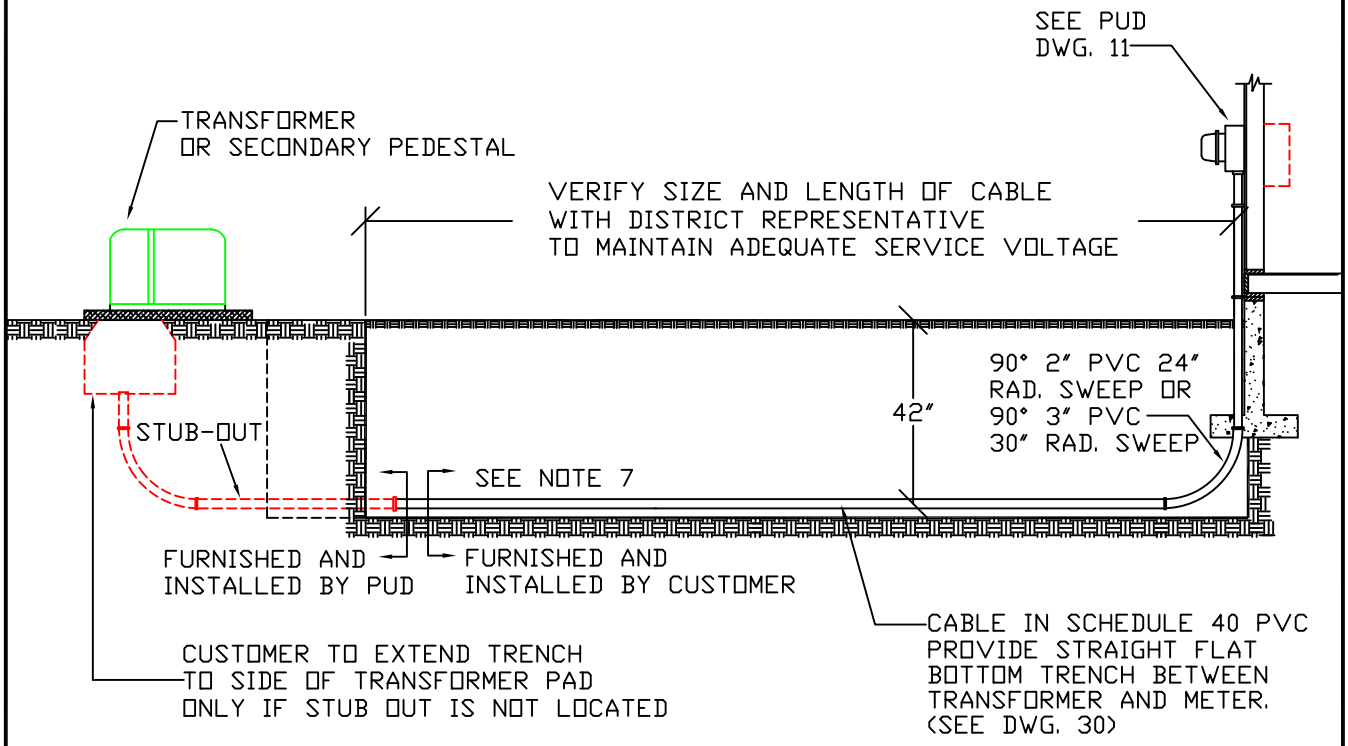

NOTES:

1) THE ABOVE EXAMPLE IS INTENDED FOR 200A AND 320A SINGLE PHASE SERVICE WITH ONE RUN OF 4/0-4/0-2/0 IN 2" CONDUIT OR TWO RUNS OF 4/0-4/0-2/0 IN 3" CONDUIT.
2) CONTACT 1-800-424-5555 FOR LOCATIONS OF UNDERGROUND UTILITIES.
3) NO STANDING WATER ALLOWED IN TRENCH.
4) CONTACT THE PUD TO DETERMINE REQUIREMENTS FOR CONNECTION OF SERVICE OTHER THAN DESCRIBED ABOVE.
5) TWO INCH CONCRETE COVER IF TRENCH DEPTH LESS THAN 18"
6) PUD WILL PUSH CUSTOMER PROVIDED CONDUCTORS INTO CONDUIT FOR SERVICES UP TO 30 FEET.
7) CUSTOMER/CONTRACTOR CONNECT TO PUD PVC STUBOUT.

DATE 10/14/94	SCALE NONE	ELECTRICAL SERVICE REQUIREMENTS UNDERGROUND SERVICE, WALL MOUNTED METER		
DRAWN KMD	REVISED 10/29/98 3/4/05 8/4/14			
APPROVED		CLALLAM COUNTY PUD #1	PAGE 31 OF 37	DRAWING # 31

H:\ENGSTANDRD\SPECS\SERV31

ALSO SEE N.E.C. REQUIREMENTS

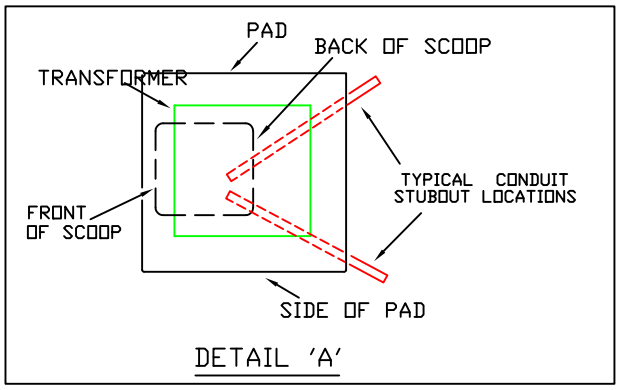

DETAIL 'A'

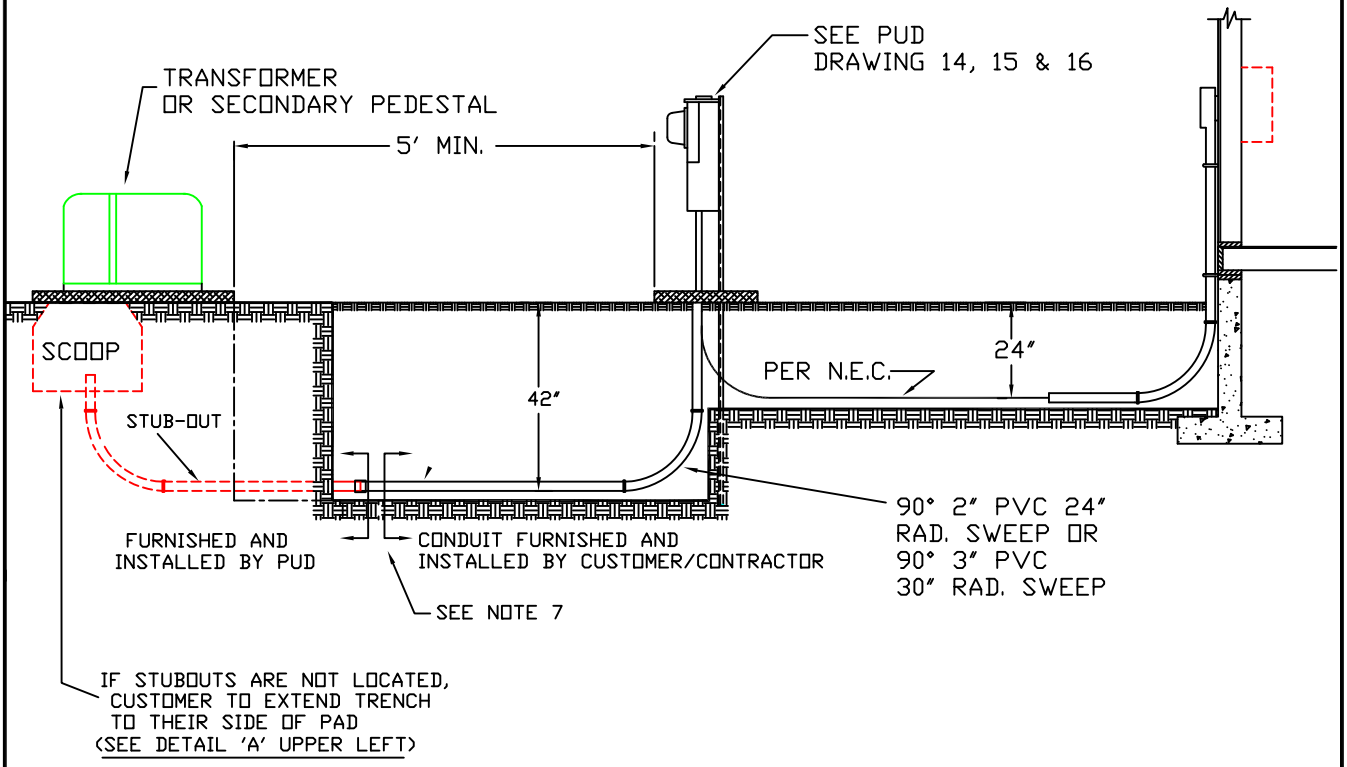

NOTES:
1) THE ABOVE EXAMPLES ARE INTENDED FOR 200A AND 320A SINGLE PHASE SERVICE WITH ONE RUN OF 4/0-4/0-2/0 IN 2" CONDUIT OR TWO RUNS OF 4/0-4/0-2/0 IN 3" CONDUIT.
2) CONTACT 1-800-424-5555 FOR LOCATIONS OF UNDERGROUND UTILITIES.
3) EXCAVATE BY HAND WITHIN TWO FEET OF OTHER UTILITY LOCATE MARKS.
4) NO STANDING WATER ALLOWED IN TRENCH.
5) CONTACT THE PUD TO DETERMINE REQUIREMENTS FOR CONNECTION OF SERVICE OTHER THAN DESCRIBED ABOVE.
6) PUD WILL PUSH CUSTOMER PROVIDED CONDUCTORS INTO CONDUIT FOR SERVICES UP TO 30 FEET.
7) CUSTOMER/CONTRACTOR CONNECT TO PUD PVC STUBOUT.

DATE 10/13/94	SCALE NONE	ELECTRICAL SERVICE REQUIREMENTS UNDERGROUND SERVICE, METER PEDESTAL		
DRAWN KMD	REVISED 08/22/00			
APPROVED	8/13/04 8/04/14	CLALLAM COUNTY PUD #1	PAGE 32 OF 37	DRAWING # 32

H:\ENGDSTANDRD\SPECS\SERV32

ALSO SEE N.E.C. REQUIREMENTS

NOTE: ALL PARTS TO BE 316 STAINLESS EXCEPT NUTS. NUTS TO BE SILICON BRONZE.

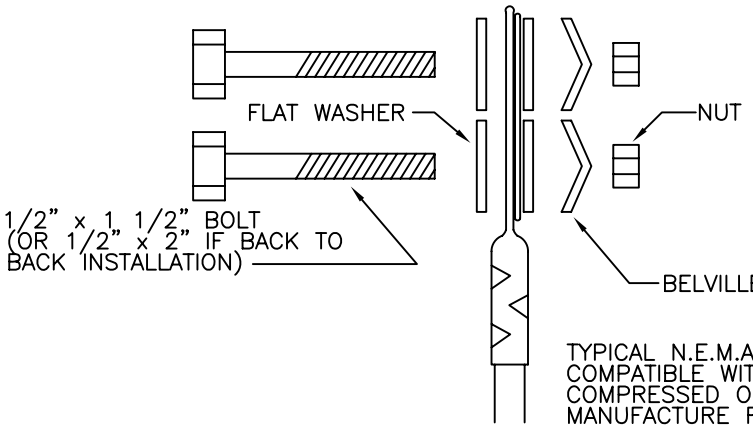

TYPICAL N.E.M.A. 2 HOLE SPADE CONNECTORS COMPATIBLE WITH SERVICE ENTRANCE CONDUCTOR COMPRESSED ON CONDUCTOR IN ACCORDANCE MANUFACTURE RECOMMENDATIONS

DETAIL

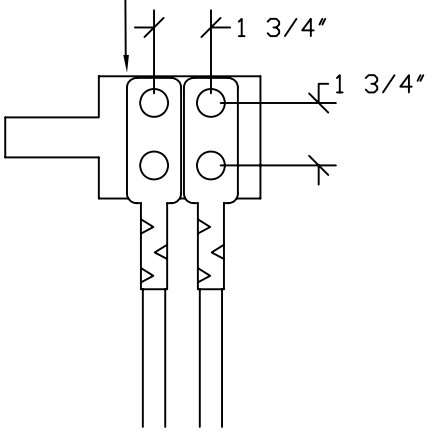

ON THREE PHASE PADMOUNTS:
WITH 350 MCM OR SMALLER DISTRICT PROVIDES MULTI-LUG CONNECTORS

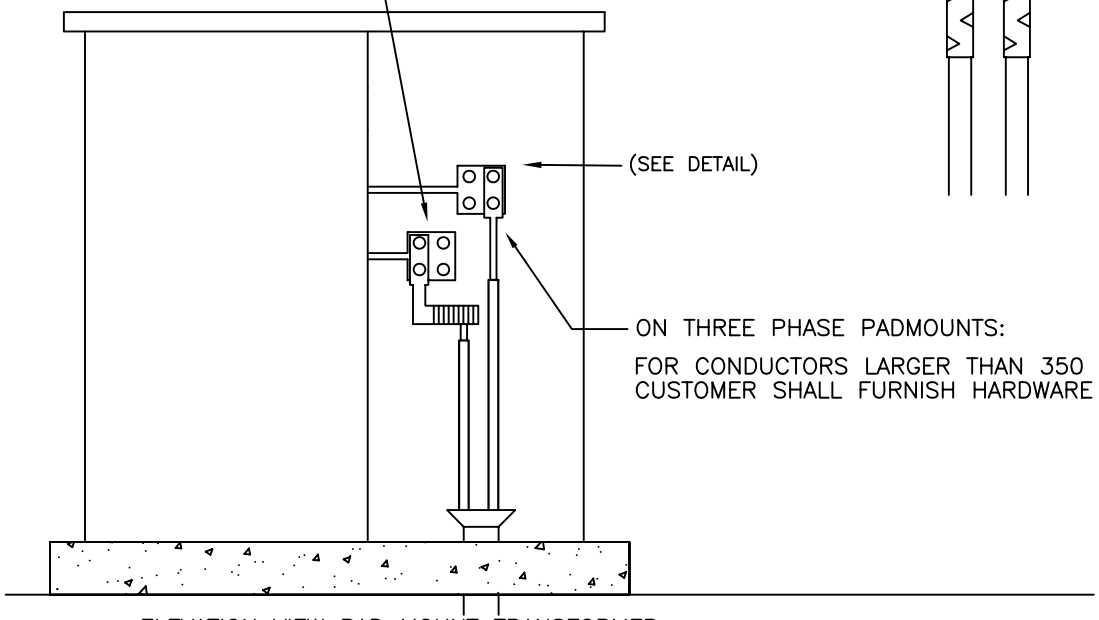

ON THREE PHASE PADMOUNTS:
FOR CONDUCTORS LARGER THAN 350 MCM CUSTOMER SHALL FURNISH HARDWARE

ELEVATION VIEW PAD MOUNT TRANSFORMER

DATE 06/15/95	SCALE NONE	ELECTRICAL SERVICE REQUIREMENTS TERMINATION OF CONDUCTORS IN 3-PHASE PAD MOUNT XFR		
DRAWN KMD	REVISED 05/05/97 10/29/98 08/13/04			
APPROVED		CLALLAM COUNTY PUD #1	PAGE 33 OF 37	DRAWING # 33

H:\ENGSTANDRD\SPECS\SERV33

REFERENCE: WAC 296-46-480
NESC TABLE 234-1

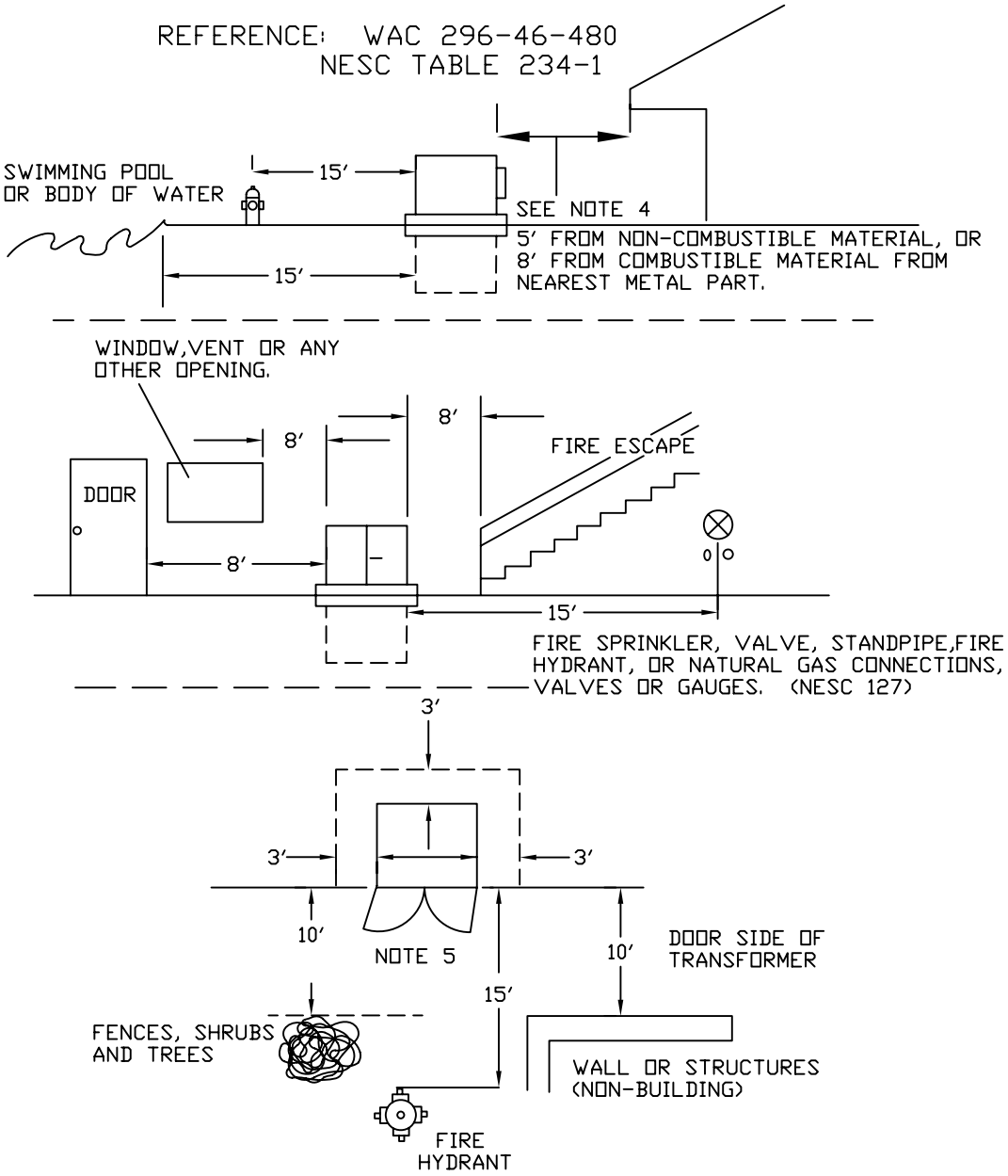

Notes:

1. ALL MEASUREMENTS FROM NEAREST METAL PART OF THE TRANSFORMER.
2. MINIMUM 20′ CLEARANCE FROM COMBUSTIBLE FUEL STORAGE TANKS.
3. PADMOUNT EQUIPMENT SHALL BE NOT MORE THAN 15′ FROM ACCESS ROAD OR DRIVEWAY.
4. NON-COMBUSTIBLE: BRICK, CONCRETE, STEEL AND STONE.
5. LANDSCAPING WHICH DOES NOT INTERFERE WITH OPERATION AND MAINTENANCE OF THE TRANSFORMER IS ALLOWED.
6. GROUND MUST SLOPE AWAY FROM BUILDING FOR TRANSFORMER INSTALLATION SHOWN.

DATE 4/14/97	SCALE NONE	ELECTRICAL SERVICE REQUIREMENTS PADMOUNT CLEARANCES		
DRAWN LB	REVISED 05/05/97 10/29/98			
APPROVED		CLALLAM COUNTY PUD #1	PAGE 34 OF 37	DRAWING # 34

H:\ENGSTANDRD\SPECS\SERV34

ALSO SEE N.E.C. REQUIREMENTS

GUARD POSTS SHALL BE FURNISHED AND INSTALLED BY THE CUSTOMER WHEN PADMOUNT EQUIPMENT IS LOCATED WITHIN AN AREA OF VEHICULAR TRAFFIC. THE DISTRICT SHALL DETERMINE THE NUMBER AND LOCATION OF ALL GUARD POSTS.

GUARD POST LOCATIONS

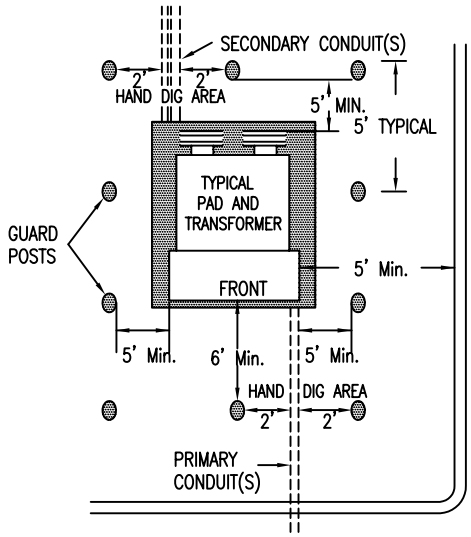

CURB – ANY STYLE

NOTE:
HAVE THE PRIMARY AND SECONDARY CONDUITS LOCATED PRIOR TO DIGGING.
CONTACT DISTRICT IF CONFLICTS OCCUR.

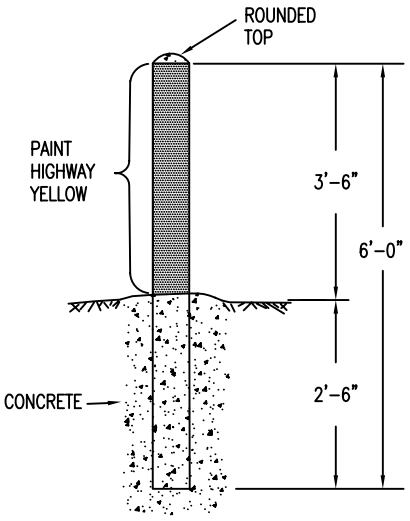

- GUARD POSTS ARE REQUIRED BY THE STATE OF WASHINGTON ELECTRICAL INSPECTION DIVISION PARAGRAPH FOUR (4) OF WAC 296-46-480 "LOCATION OF PADMOUNT TRANSFORMERS", WHEN LOCATED WHERE EXPOSED TO VEHICULAR TRAFFIC OR OTHER MOBILE TYPE MACHINERY.
- GUARD POSTS SHALL BE FURNISHED AND INSTALLED BY THE CONTRACTOR AT NO EXPENSE TO THE DISTRICT.
- THE DISTRICT SHALL DETERMINE THE NUMBER AND ESTABLISH THE LOCATIONS OF ALL GUARD POSTS.
- TWO TYPES OF GUARD POSTS ARE ACCEPTED BY THE DISTRICT. TYPE ONE IS A 6" X 60" STEEL PIPE SET IN AND FILLED WITH CONCRETE. TYPE TWO IS A 9" X 72" PRECAST STEEL REINFORCED CONCRETE POST SET IN CONCRETE. THE EXPOSED PORTION OF THE POST SHALL BE PAINTED HIGHWAY YELLOW.

REFER TO PAGE 34 FOR BUILDING CLEARANCES.

TYPICAL EXAMPLES

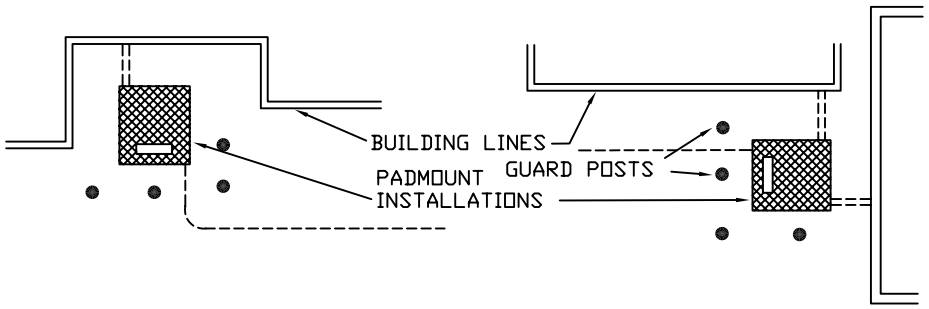

DATE 4/21/97	SCALE NONE	ELECTRICAL SERVICE REQUIREMENTS GUARD POST LOCATIONS		
DRAWN LB / dt	REVISED 05/05/97 11/29/08			
APPROVED		CLALLAM COUNTY PUD #1	PAGE 35 OF 37	DRAWING # 35

ALSO SEE N.E.C. REQUIREMENTS

This page intentionally left blank

DATE 4/28/97	SCALE NONE	ELECTRICAL SERVICE REQUIREMENTS		
DRAWN LB	REVISED 05/05/97 10/29/98 03/14/00	CLALLAM COUNTY PUD #1	PAGE 36 OF 37	DRAWING # 36
APPROVED				

ALSO SEE N.E.C. REQUIREMENTS

ENTIRE LOAD TRANSFERABLE

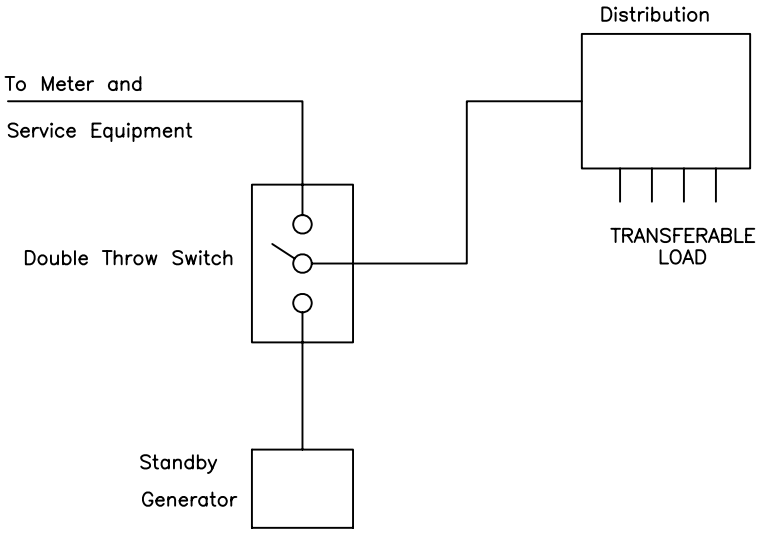

PARTIAL LOAD TRANSFERABLE

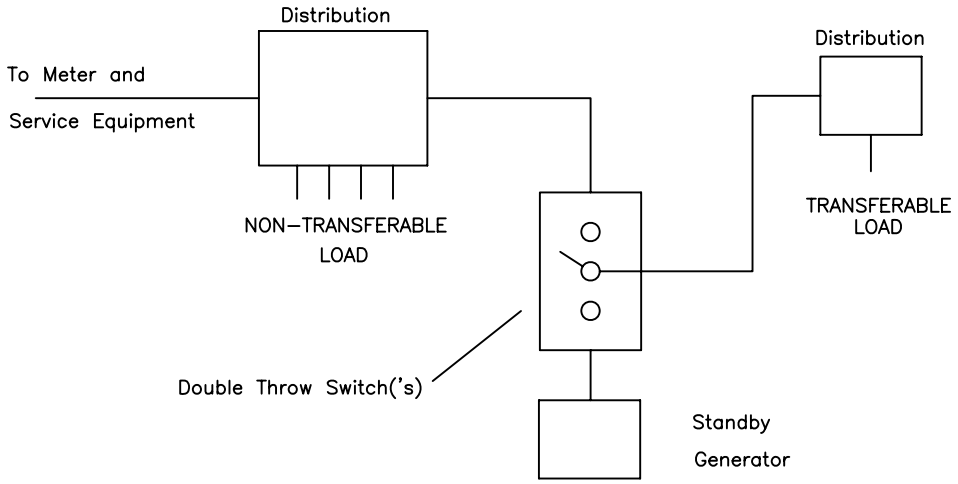

CUSTOMER GENERATION AND TRANSFER SWITCHES

DATE 1/29/99	SCALE NONE	ELECTRICAL SERVICE REQUIREMENTS STANDBY GENERATOR SCHEMATIC CONNECTION DIAGRAMS		
DRAWN DWP	REVISED			
APPROVED	1/29/99	CLALLAM COUNTY PUD #1	PAGE 37 OF 37	DRAWNG # 37

Q:\SPECS\SERV37