330 - PRIMARY - THREE PHASE:

TANGENT:

		ASSEMBLY/DWG	REF. CODE
C1	**VERTICAL**		
	• 30/60 DEG SWING ANGLE	C1.5	DA310-090
C2	**ALLEY ARM**		
	• SINGLE ALLEY ARM - LOWER NEUTRAL	C2.1	
	• SINGLE ALLEY ARM - UPPER NEUTRAL	C2.11	
	• DOUBLE ALLEY ARM - LOWER NEUTRAL	C2.2	
	• DOUBLE ALLEY ARM - UPPER NEUTRAL	C2.21	DA334-350
	• SINGLE FBRGLS ALLEY ARM - LOWER NEUTRAL	C2F.1	
	• SINGLE FBRGLS ALLEY ARM - UPPER NEUTRAL	C2F.11	
	• DOUBLE FBRGLS ALLEY ARM - LOWER NEUTRAL	C2F.2	
	• DOUBLE FBRGLS ALLEY ARM - UPPER NEUTRAL	C2F.21	
C3.0	**CROSSARM - LOWER NEUTRAL (W/O POLE TOP PIN)**		
	• SINGLE CROSSARM - FLAT BRACE	C3.01	DA332-110
	• SINGLE CROSSARM - Vee- BRACE	C3.02	
	• DOUBLE CROSSARM - FLAT BRACE	C3.03	
	• DOUBLE CROSSARM - Vee BRACE	C3.04	
C3.1	**CROSSARM - UPPER NEUTRAL (W/O POLE TOP PIN)**		
	• SINGLE CROSSARM - FLAT BRACE	C3.11	
	• SINGLE CROSSARM - Vee BRACE	C3.12	
	• DOUBLE CROSSARM - FLAT BRACE	C3.13	
	• DOUBLE CROSSARM - Vee BRACE	C3.14	
	• SINGLE CROSSARM - 10' FIBERGLASS	C3.17	
	• DOUBLE CROSSARM - 10' FIBERGLASS	C3.18	
C3.2	**CROSSARM - LOWER NEUTRAL-POLE TOP PIN**		
	• SINGLE CROSSARM - FLAT BRACE	C3.21	
	• DOUBLE CROSSARM - Vee BRACE	C3.22	
	• DOUBLE CROSSARM - FLAT BRACE	C3.23	
	• DOUBLE CROSSARM - Vee BRACE	C3.24	
	• LOWER NEUTRAL, 10FT FBRGLS ARM	C3.27	
	• LOWER NEUTRAL, 8FT FBRGLS ARM	C3.28	
C3.3	**SIDEPOLE BRACKET - LOWER NEUTRAL "NARROW PROFILE"**		
	• SAME SIDE - SINGLE PIN	C3.3	
	• SAME SIDE - DOUBLE PIN	C3.4	
	• BRAKETS OPPOSED - SINGLE PIN	C3.5	
	• BRACKET OPPOSED - DOUBLE PIN	C3.6	

* TO OBTAIN MATERIAL PRINTOUTS FOR 25KV, INCLUDE A PLUS (+) SIGN BEFORE THE 15KV ASSEMBLY SPECIFICATION NUMBER

330 - PRIMARY - THREE PHASE: CONTINUED

DEADEND:

	ASSEMBLY/DWG	REF. CODE

C4-1 VERTICAL

- SINGLE DEADEND - LOWER NEUTRAL — C4-1.1
- SINGLE DEADEND - EXTENSION LINK — C4-1.2

C4-3 SINGLE DEADEND - DOUBLE CROSSARM

- FLAT BRACE - LOWER NEUTRAL — C4-3.3
- FLAT BRACE - UPPER NEUTRAL — C4-3.13

C4-3 SINGLE DEADEND - FIBERGLASS

- 8FT FIBERGLASS - LOWER NEUTRAL — C4-3.6
- 10FT FIBERGLASS - LOWER NEUTRAL — C4-3.7
- 10FT FIBERGLASS - UPPER NEUTRAL — C4-3.17

C5-1 DOUBLE DEADEND - VERTICAL

- DDE 60-90deg — C5-1.2

C5-3 DOUBLE DEADEND - DOUBLE CROSSARM

- FLAT BRACE - LOWER NEUTRAL — C5-3.3
- FLAT BRACE - UPPER NEUTRAL — C5-3.13

C5-3 DOUBLE DEADEND - FIBERGLASS CROSSARM

- 10FT FIBERGLASS - UPPER NEUTRAL — C5-3.17

* TO OBTAIN MATERIAL PRINTOUTS FOR 25KV, INCLUDE A PLUS (+) SIGN BEFORE THE 15KV ASSEMBLY SPECIFICATION NUMBER

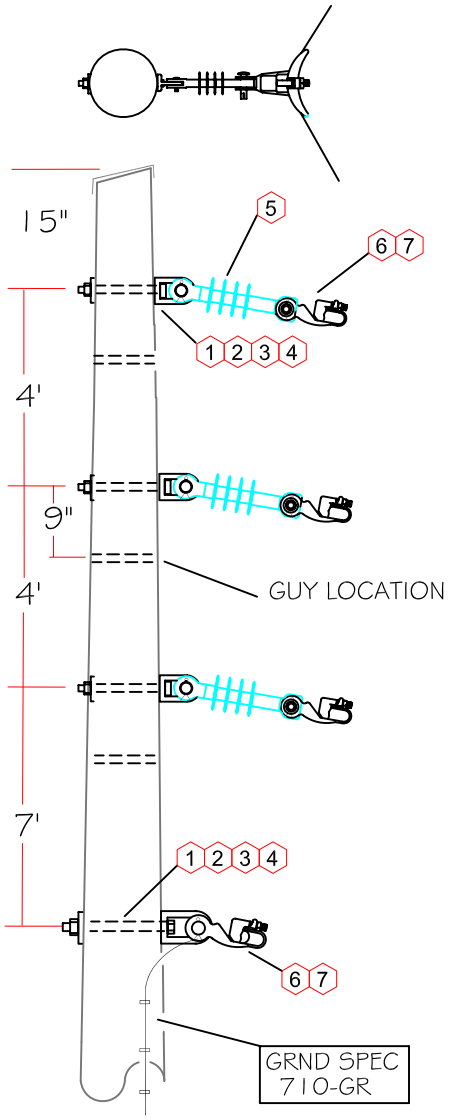

C1.5 - 30/60 SWING
(+C1.5 for 25KV)

ITEM	DESCRIPTION	QNTY C1.5	STOCK #
1	xxx BOLT MACH - 5/8 x 12	4	3031200
2	XXX wash - sq curv-3	4	3303900
3	XXX - D-EYE - 5/8	4	3990100
4	XXX wash - dbl coil lock - 5/8	4	3330900
5	SUSPENSION INSUL - 15KV POLY	3	4021500
+5	SUSPENSION INSUL - 25KV POLY	3	4022500
6	SUSPENSION CLAMP (SEE 1000.CL)	4	AS REQ'D
7	xxx TIE PROCEDURES (SEE 1000.TY)	AS REQ'D	AS REQ'D

DATE: 08/20/04
REV: 5/21/2007
DRAWN: JK/DT
CHK: RA/DP
PG 1 OF 1
FILE: H:\ENGSTANDARDS\05 SPECBOOK\300-DISTRIB_OH\330-3 PHS\C1.5

GROUP: PRIMARY - THREE PHASE - TANGENT
TYPE: VERTICAL - SWING ANGLE - (30deg-60deg)

OPTIONS:

C1.5

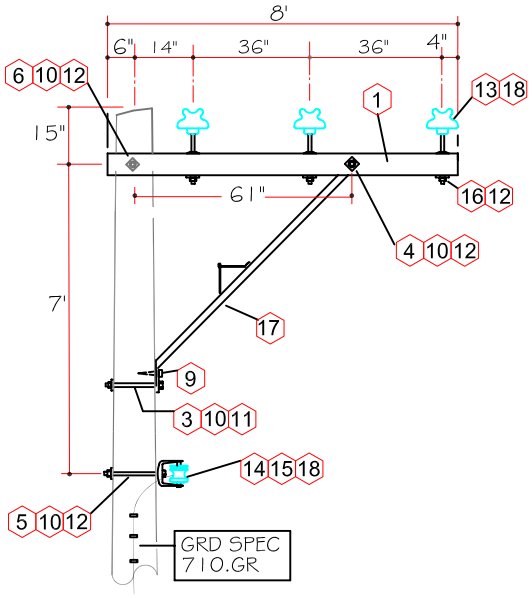

C2.1 (LWR NEUT-SNGL. ARM)

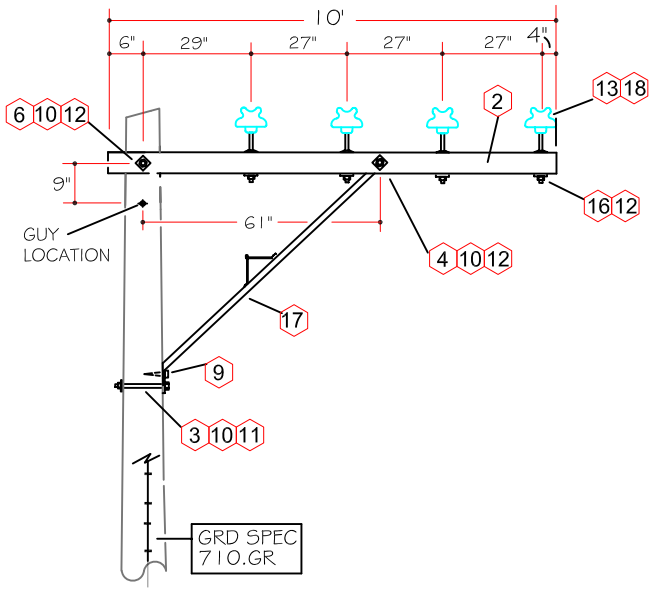

C2.11 (UPR NEUT-SNGL. ARM)

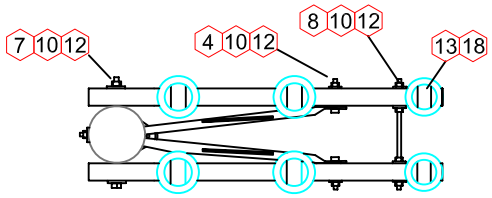

C2.2 (LWR NEUT-DBL. ARM)

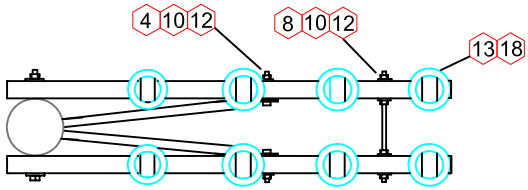

C2.21 (UPR NEUT- DBL. ARM)

(NOTE: USE A PLUS SIGN BEFORE THE ASSEMBLY NUMBER FOR 25KV APPLICATIONS, +C2.1, +C2.11...)

ITEM	DESCRIPTION	QUANTITY				STOCK #
		C2.1	C2.2	C2.11	C2.21	
1	CROSSARM - 8'x3"x4"	1	2	0	0	1040800
2	CROSSARM - 10'x3"x4"	0	0	1	2	1041000
3	xxx - BOLT MACH - 12 x 1/2	1	2	1	2	3021200
4	xxx - BOLT MACH - 6 x 5/8	1	2	1	2	3030600
5	xxx - BOLT MACH - 12 X 5/8	2	3	1	2	3031200
6	xxx - BOLT MACH - 16 X 5/8	1	0	1	0	3031600
7	xxx - BOLT MACH - 20 X 5/8	0	1	0	1	3032000
8	xxx - BOLT DA - 22 X 5/8	0	1	0	1	3082200
9	xxx - LAG SCREW 4 X 1/2	1	2	1	2	3201500
10	XXX WASHER - sq-2 1/4	5	11	4	10	3292000
11	XXX WASHER - DBL COIL LOCK - 1/2	4	8	3	7	3330800
12	XXX WASHER - DBL COIL LOCK - 5/8	1	2	1	2	3330900
13	PIN TYPE INSULATOR 15KV	3	6	4	8	4011500
+13	PIN TYPE INSULATOR 25KV	3	6	4	8	4012500
14	xxx - SPOOL INSULATOR	1	1	0	0	4025000
15	xxx -CLEVIS	1	1	0	0	4025200
16	xxx CROSSARM PIN	3	6	4	8	4500100
17	BRACE-ALLEY ARM - 84"	1	2	1	2	1307300
18	xxx TIES (SEE 1000.TY)	4	7	4	9	AS REQ'D

DATE: 8/15/2007
REV: 5/21/2007
DRAWN: JK/DT
CHK: RA/DP
PG 1 OF 1
FILE: H:\ENGSTANDARDS\06 SPECBOOK\300-DISTRIB_OH\330-V PHS\C2-SET

GROUP: PRIMARY - THREE PHASE - TANGENT
TYPE: ALLEY ARM

OPTIONS: SINGLE OR DOUBLE ARM - LOWER OR UPPER NEUTRAL

C2.1 SET

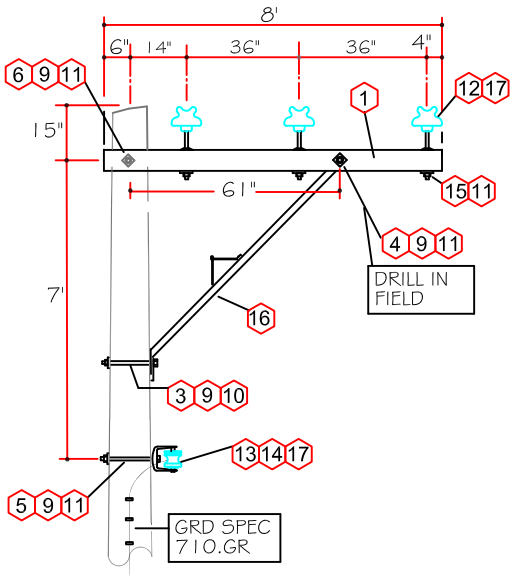

C2F.1 (LWR NEUT-SNGL. FBRGLS ARM)

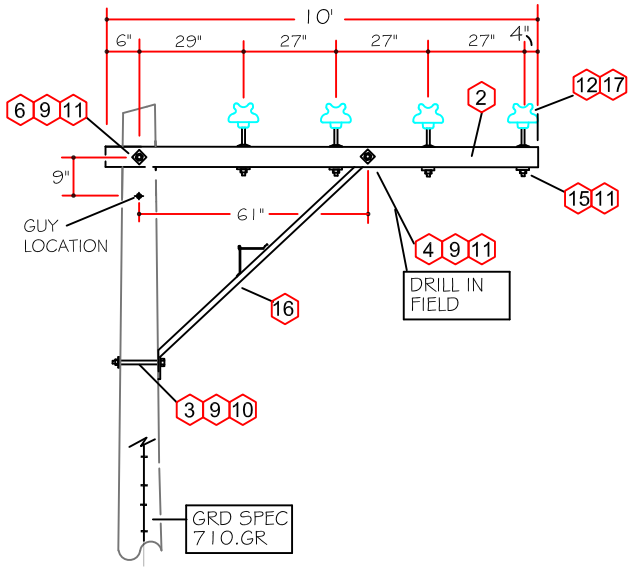

C2F.11 (UPR NEUT-SNGL. FBRGLS ARM)

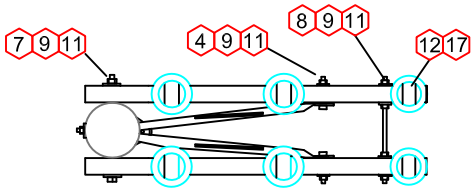

C2F.2 (LWR NEUT-DBL. FBRGLS ARM)

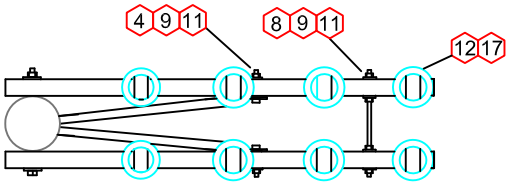

C2F.21 (UPR NEUT- DBL. FBRGLS ARM)

(NOTE: USE A PLUS SIGN BEFORE THE ASSEMBLY NUMBER FOR 25KV APPLICATIONS, +C2F.1, +C2F.11...)

ITEM	DESCRIPTION	QUANTITY C2F.1	C2F.2	C2F.11	C2F.21	STOCK #
1	CROSSARM - FBRGLS - 8' x 3-1/2"x4-1/2"	1	2	0	0	1040808
2	CROSSARM - FBRGLS - 10'x 3-1/2"x4-1/2"	0	0	1	2	1051100
3	xxx - BOLT MACH - 12" x 1/2"	1	2	1	2	3021200
4	xxx - BOLT MACH - 6" x 5/8"	1	2	1	2	3030600
5	xxx - BOLT MACH - 12" X 5/8"	2	3	1	2	3031200
6	xxx - BOLT MACH - 16" X 5/8"	1	0	1	0	3031600
7	xxx - BOLT MACH - 20" X 5/8"	0	1	0	1	3032000
8	xxx - BOLT DA - 22" X 5/8"	0	1	0	1	3082200
9	XXX WASHER - sq-2 1/4"	5	11	4	10	3292000
10	XXX WASHER - DBL COIL LOCK - 1/2"	4	8	3	7	3330800
11	XXX WASHER - DBL COIL LOCK - 5/8"	1	2	1	2	3330900
12	PIN TYPE INSULATOR 15KV	3	6	4	8	4011500
+12	PIN TYPE INSULATOR 25KV	3	6	4	8	4012500
13	xxx - SPOOL INSULATOR	1	1	0	0	4025000
14	xxx -CLEVIS	1	1	0	0	4025200
15	xxx CROSSARM PIN	3	6	4	8	4500100
16	BRACE-ALLEY ARM - 84"	1	2	1	2	1307300
17	xxx TIES (SEE 1000.TY)	4	7	4	9	AS REQ'D

DATE: 3/15/2018
REV: XXXXXXXX
DRAWN: AP
CHK: MH
PG 1 OF 1
FILE: H:\ENGSTANDARDS\06 SPECBOOK\300-DISTRIB_OH\330-3 PHS\C2F-SET

CLALLAM COUNTY PUD Bringing Energy To Life

GROUP: PRIMARY - THREE PHASE - TANGENT
TYPE: FIBERGLASS ALLEY ARM

OPTIONS: SINGLE OR DOUBLE FBRGLS ARM - LOWER OR UPPER NEUTRAL

C2F SET

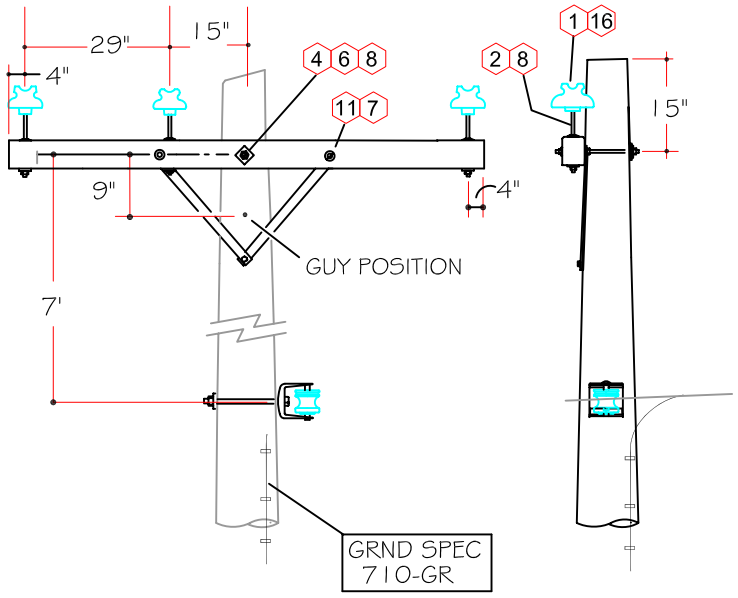

C3.01 (SNGL XRM FLAT BRC)

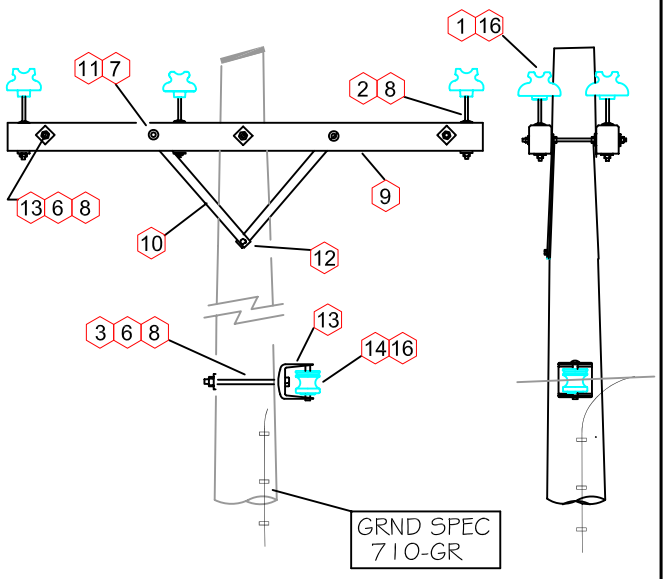

C3.03 (DBL XRM FLAT BRC)

(NOTE: FOR 556.5 ACSR AND LARGER USE V-BRACE, SEE C3.02, C3.04)
(NOTE: USE A PLUS SIGN BEFORE THE ASSEMBLY NUMBER FOR 25KV APPLICATIONS, +C-3.01...)

ITEM	DESCRIPTION	QUANTITY		STOCK #
		C3.01	C3.03	
1	PIN TYPE INSULATOR 15KV	3	6	4011500
+1	PIN TYPE INSULATOR 25KV	3	6	4012500
2	xxx CROSSARM PIN	3	6	4500100
3	xxx - BOLT MACH - 12 X 5/8	1	1	3031200
4	xxx - BOLT MACH - 16 X 5/8	1	0	3031600
5	xxx - BOLT MACH - 20 X 5/8	0	1	3032000
6	XXX - WASHER - sq-2 1/4	3	11	3292000
7	XXX - WASHER - dbl coil lock - 3/8	2	2	3330700
8	XXX - WASHER - DBL COIL LOCK - 5/8	2	6	3330900
9	CROSSARM - 8'x3"x4"	1	2	1040800
10	xxx - BRACE - FLAT	2	2	1302800
11	xxx - CARRIAGE BOLT - 5" X 3/8"	2	2	3200500
12	xxx - LAG SCREW	1	1	3201500
13	xxx - BOLT DA - 22 X 5/8	0	2	3082200
14	xxx - SPOOL INSULATOR	1	1	4025000
15	xxx -CLEVIS	1	1	4025200
16	xxx TIES (SEE 1000.TY)	4	4	**AS REQ'D**

GROUP: PRIMARY - THREE PHASE - TANGENT
TYPE: CROSSARM - LOWER NEUTRAL

OPTIONS: FLAT BRACE - SINGLE ARM — **C3.01**
FLAT BRACE - DOUBLE ARM — **C3.03**

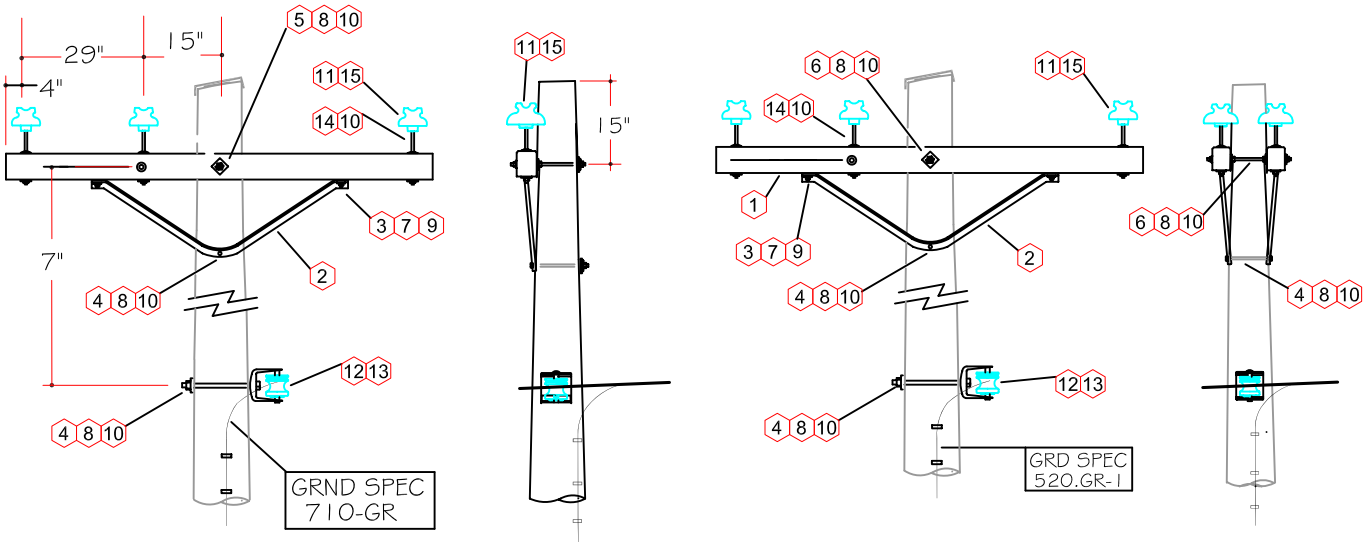

C3.02 = SGL XRM-VEE BRC

C3.04= DBL XRM-VEE BRC

(NOTE: USE A PLUS SIGN BEFORE THE ASSEMBLY NUMBER FOR 25KV APPLICATIONS, +C-3.02...)

ITEM	DESCRIPTION	QUANTITY		STOCK #
		C3.02	C3.04	
1	CROSSARM - 8'x3"x4"	1	2	1040800
2	V BRACE - 60	1	2	1306000
3	xxx - BOLT MACH - 6 X 1/2	2	4	3020600
4	xxx - BOLT MACH - 12 X 5/8	2	2	3031200
5	xxx - BOLT MACH - 16 X 5/8	1	~	3031600
6	xxx - BOLT DA - 22 X 5/8	~	3	3082200
7	xxx - ROUND WASHER - 1/2	2	4	3280800
8	XXX - WASHER - sq-2 1/4	4	11	3292000
9	XXX - WASHER - DBL COIL LOCK - 1/2	2	4	3330800
10	XXX - WASHER - DBL COIL LOCK - 5/8	3	7	3330900
11	PIN TYPE INSULATOR 15KV	3	6	4011500
+11	PIN TYPE INSULATOR 25KV	3	6	4012500
12	xxx - SPOOL INSULATOR	1	1	4025000
13	xxx -CLEVIS	1	1	4025200
14	xxx CROSSARM PIN	3	6	4500100
15	xxx TIES (SEE 1000.TY)	4	4	**AS REQ'D**

DATE: 08/20/04
REV: 05/19/07
DRAWN: JK/DT
CHK: RA/DP
PG 1 OF 1
FILE: H:\ENGSTANDARDS\05 SPECBOOK\300-DISTRIB_OH\330-3 PHS\C3.0-SET

GROUP: PRIMARY - THREE PHASE - TANGENT
TYPE: CROSSARM - LOWER NEUTRAL

OPTIONS: Vee BRACE - SINGLE ARM — **C3.02**
Vee BRACE - DOUBLE ARM — **C3.04**

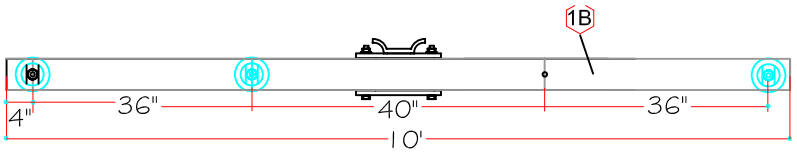

C3.07 (10'-FT ARM)

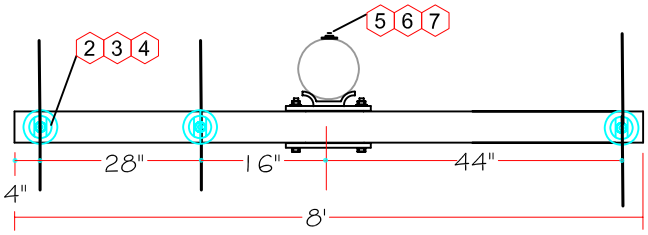

C3.06 (8'-FT ARM)

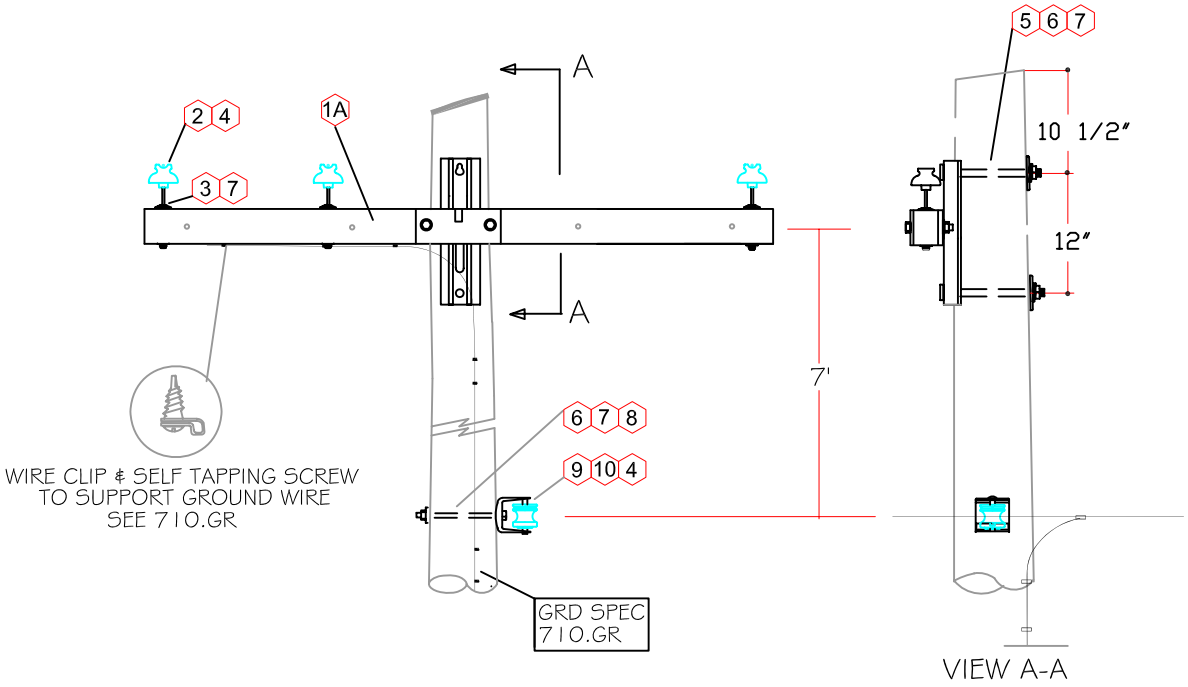

(NOTE +C3.06, +C3.07 for 25KV)

ITEM	DESCRIPTION	QNTY C3.06	QNTY C3.07	STOCK #
1A	CROSSARM - FBRGLS - 8' x 3-1/2"x4-1/2"	1	0	1040808
1B	CROSSARM - FBRGLS - 10' x 3-1/2"x4-1/2"	0	1	1051100
2	PIN TYPE INSULATOR 15KV	3	3	4011500
+2	PIN TYPE INSULATOR 25KV	3	3	4012500
3	xxx - CROSSARM PIN	3	3	4500100
4	xxx TIES (SEE 1000.TY)	4	4	**AS REQ'D**
5	xxx - BOLT MACH - 14 X 5/8"	2	2	3031400
6	xxx - WASHER - sq-curv-3	3	3	3303900
7	xxx - WASHER - dbl coil lock - 5/8"	3	3	3330900
8	xxx - BOLT MACH - 12 X 5/8"	1	1	3031200
9	xxx - SPOOL INSULATOR	1	1	4025000
10	xxx - CLEVIS	1	1	4025200

DATE: 01/10/06
REV: 05/20/07
DRAWN: JK/DT
CHK: RA/DP
PG 1 OF 1
FILE: H:\ENGSTANDARDS\06 SPECBOOK\300-DISTRIB_OH\330-3 PHS\C3.6

GROUP: PRIMARY - THREE PHASE - TANGENT
TYPE: SINGLE CROSSARM - LOWER NEUTRAL - W/O POLE TOP PIN

OPTIONS:		
	8' FIBERGLASS CROSSARM	**C3.06**
	10' FIBERGLASS CROSSARM	**C3.07**

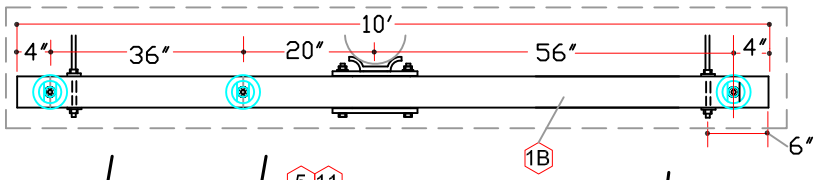

C3.09 (10'-FT ARM)

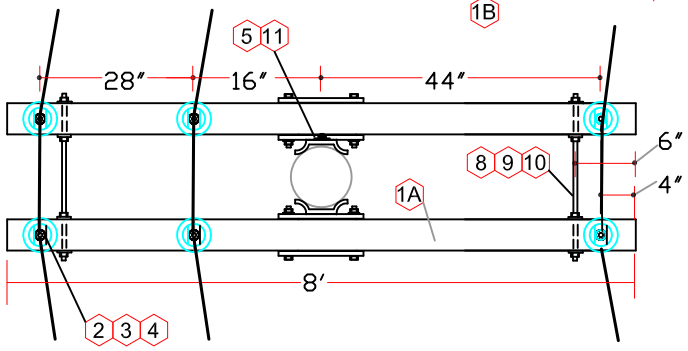

C3.08 (8'-FT ARM)

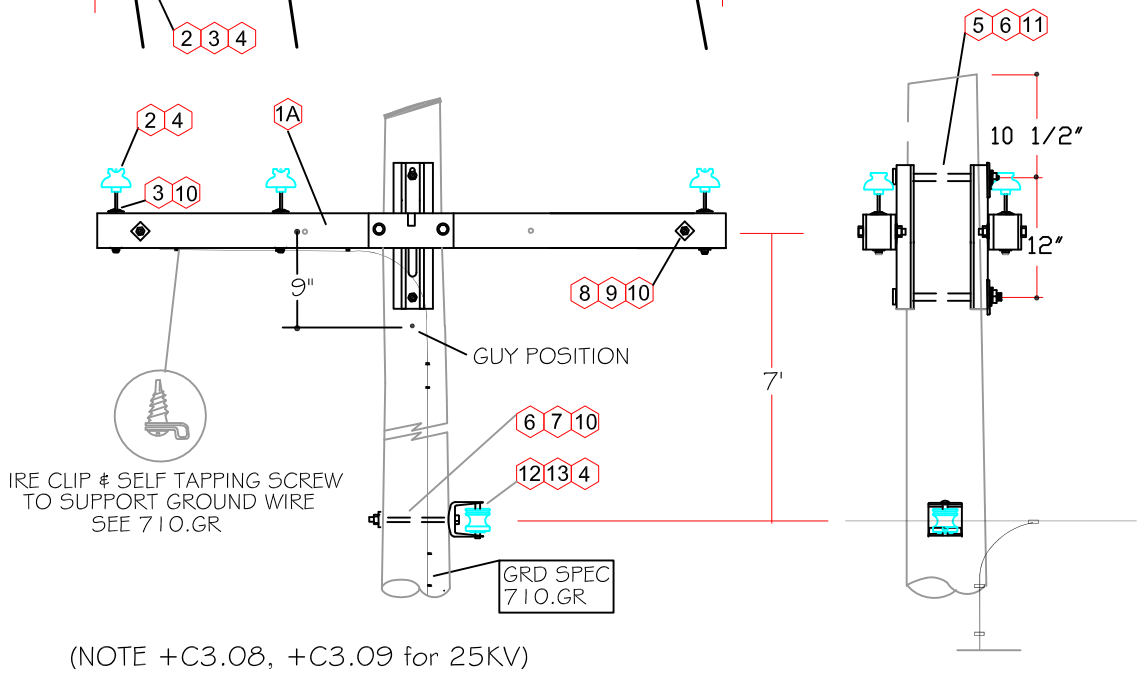

(NOTE +C3.08, +C3.09 for 25KV)

ITEM	DESCRIPTION	QNTY C3.08	QNTY C3.09	STOCK #
1A	CROSSARM - FBRGLS - 8' x 3-1/2"x4-1/2"	2	0	1040808
1B	CROSSARM - FBRGLS - 10' x 3-1/2"x4-1/2"	0	2	1051100
2	PIN TYPE INSULATOR 15KV	6	6	4011500
+2	PIN TYPE INSULATOR 25KV	6	6	4012500
3	xxx - CROSSARM PIN	6	6	4500100
4	xxx TIES (SEE 1000.TY)	4	4	**AS REQ'D**
5	xxx - BOLT MACH - 20 X 3/4"	2	2	3092000
6	xxx - WASHER - sq-curv-3	3	3	3303900
7	xxx - BOLT MACH - 12 X 5/8"	1	1	3031200
8	xxx - BOLT DA 26" x 5/8"	2	2	3082600
9	xxx - WASHER - SQ-2 1/4	12	12	3292000
10	xxx - WASHER - dbl coil lock - 5/8"	15	15	3330900
11	xxx - DOUBLE COIL 3/4" LOCK WASHER	2	2	3331000
12	xxx - SPOOL INSULATOR	1	1	4025000
13	xxx - CLEVIS	1	1	4025200

DATE: 01/10/06
REV: 6/27/2012
DRAWN: JK/DT
CHK: RA/DP
PG 1 OF 1
FILE: H:\ENGSTANDARDS\06 SPECBOOK\300-DISTRIB_OH\330-3 PHS\C3.6

GROUP: PRIMARY - THREE PHASE - TANGENT
TYPE: DOUBLE CROSSARM - LOWER NEUTRAL - W/O POLE TOP PIN

OPTIONS:		
	8' FIBERGLASS DOUBLE CROSSARM	**C3.08**
	10' FIBERGLASS DOUBLE CROSSARM	**C3.09**

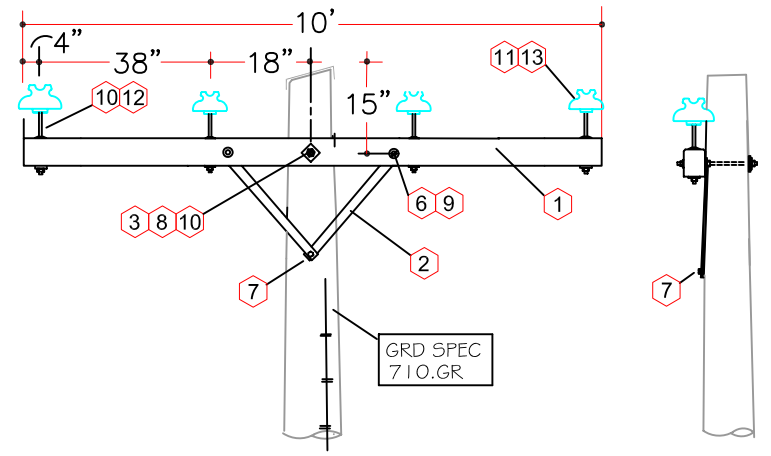

C3.11 (SNGL XRM FLAT BRC)

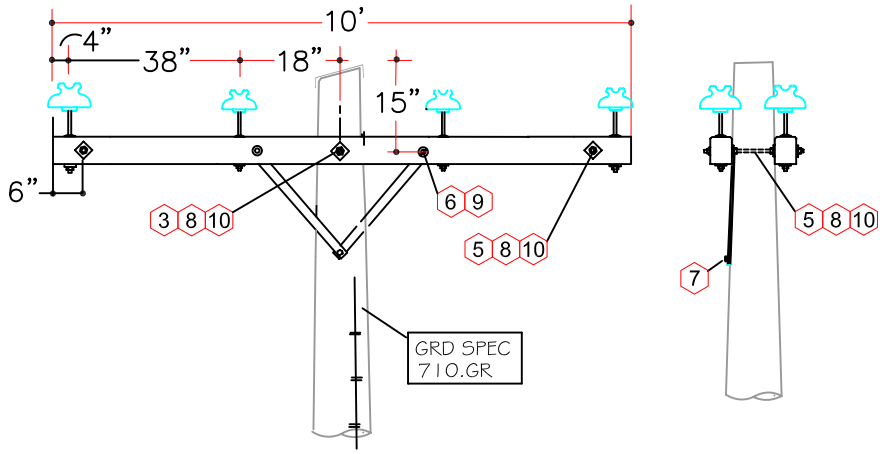

C3.13 (DBL XRM FLAT BRC)

(NOTE: FOR 556.5 ACSR AND BIGGER, USE V-BRACE, SEE C3.12, C3.14)
(NOTE: USE A PLUS SIGN BEFORE THE ASSEMBLY NUMBER FOR 25KV APPLICATIONS, +C3-1.1)

ITEM	DESCRIPTION	QUANTITY		STOCK #
		C3.11	C3.13	
1	CROSSARM - 10'x3"x4"	1	2	1041000
2	xxx - BRACE - FLAT	2	2	1302800
3	xxx - BOLT MACH - 16 X 5/8	1	0	3031600
4	xxx - BOLT MACH - 20 X 5/8	0	1	3032000
5	xxx - BOLT DA - 22 X 5/8	0	2	3082200
6	xxx - CARRIAGE BOLT - 5" X 3/8"	2	2	3200500
7	xxx - LAG SCREW	1	1	3201500
8	XXX - WASHER - sq-2 1/4	2	10	3292000
9	XXX - WASHER - dbl coil lock - 3/8	2	2	3330700
10	XXX - WASHER - DBL COIL LOCK - 5/8	1	5	3330900
11	PIN TYPE INSULATOR 15KV	4	8	4011500
+11	PIN TYPE INSULATOR 25KV	4	8	4012500
12	xxx CROSSARM PIN	4	8	4500100
13	xxx TIES (SEE 1000.TY)	4	8	AS REQ'D

DATE: 08/20/04
REV: 5/21/2007
DRAWN: JK/DT
CHK: RA/DP
PG 1 OF 1
FILE: H:\ENGSTANDARDS\05 SPECBOOK\300-DISTRIB_OH\320-3 PHS\C3.1-SET

GROUP: PRIMARY - THREE PHASE - TANGENT
TYPE: CROSSARM - UPPER NEUTRAL

OPTIONS: FLAT BRACE - SINGLE ARM — **C3.11**
FLAT BRACE - DOUBLE ARM — **C3.13**

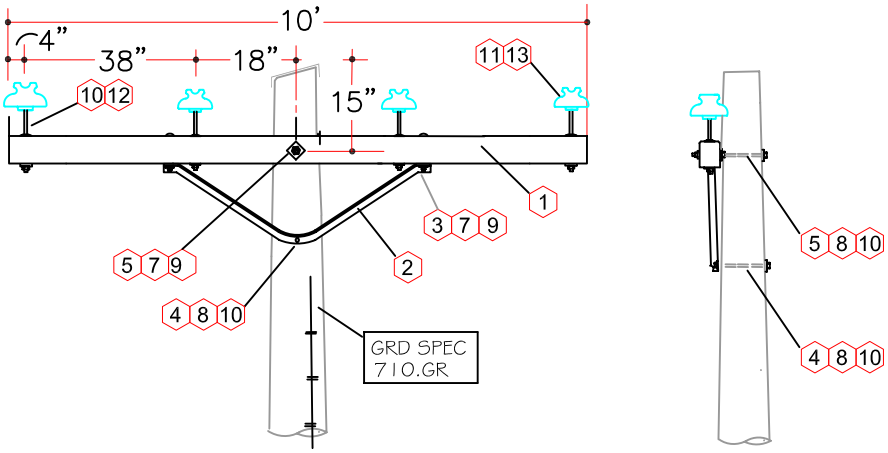

C3.12 (SNGL XRM V-BRACE)

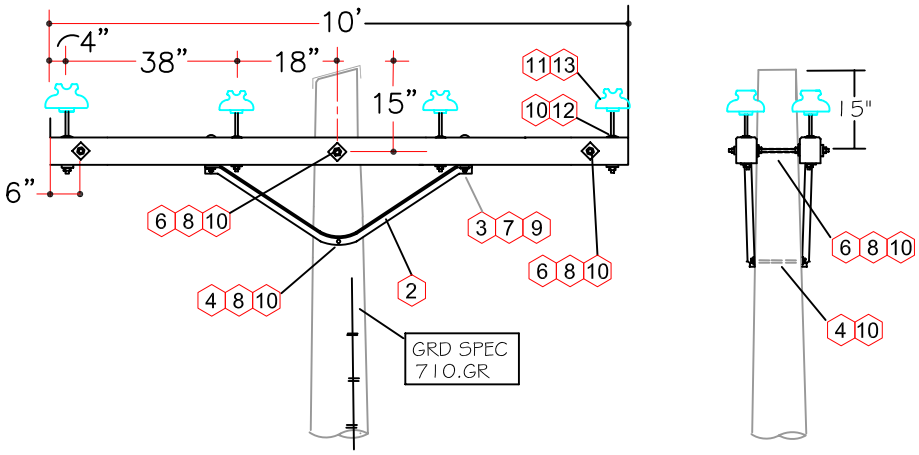

C3.14 (DBL XRM V-BRACE)

ITEM	DESCRIPTION	QUANTITY		STOCK #
		C3.12	C3.14	
1	CROSSARM - 10'x3"x4"	1	2	1041000
2	V-BRACE - 60	1	2	1306000
3	xxx - BOLT MACH - 6 X 1/2	2	4	3020600
4	xxx - BOLT MACH - 12 X 5/8	2	4	3031200
5	xxx - BOLT MACH - 16 X 5/8	1	1	3031600
6	xxx - BOLT DA - 22 X 5/8	0	3	3082200
7	xxx - ROUND WASHER - 1/2	2	4	3200500
8	XXX - WASHER - sq-2 1/4	2	11	3292000
9	XXX - WASHER - dbl coil lock - 1/2	2	2	3330800
10	XXX - WASHER - DBL COIL LOCK - 5/8	1	6	3330900
11	PIN TYPE INSULATOR 15KV	4	8	4011500
+11	PIN TYPE INSULATOR 25KV	4	8	4012500
12	xxx CROSSARM PIN	4	8	4500100
13	xxx TIES (SEE 1000.TY)	4	8	AS REQ'D

DATE: 08/20/04
REV: 5/21/2007
DRAWN: JK/DT
CHK: RA/DP
PG 1 OF 1
FILE: H:\ENGSTANDARDS\05 SPECBOOK\300-DISTRIB_OH\320-3 PHS\C3.1-SET

GROUP: PRIMARY - THREE PHASE - TANGENT
TYPE: CROSSARM - UPPER NEUTRAL

OPTIONS: Vee BRACE - SINGLE ARM — **C3.12**
Vee BRACE - DOUBLE ARM — **C3.14**

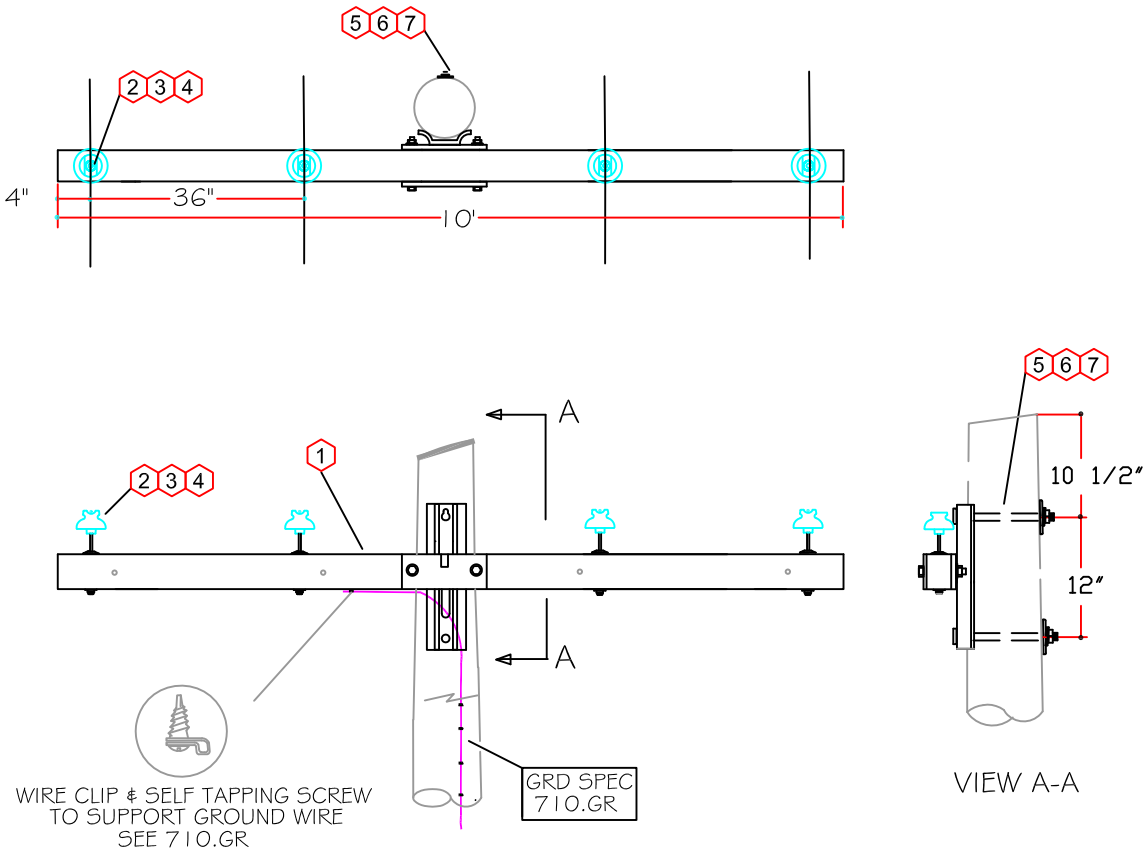

C3.17

(NOTE +C3.17 for 25KV)

ITEM	DESCRIPTION	QNTY C3.17	STOCK #
1	CROSSARM - FBRGLS - 10' x 3-1/2"x4-1/2"	1	1051100
2	PIN TYPE INSULATOR 15KV	4	4011500
+2	PIN TYPE INSULATOR 25KV	4	4012500
3	xxx - CROSSARM PIN	4	4500100
4	xxx TIES (SEE 1000.TY)	4	AS REQ'D
5	xxx - BOLT MACH - 14 X3/4"	2	3041400
6	xxx - WASHER - sq-curv-4"	2	3306000
7	xxx - WASHER - dbl coil lock - 3/4"	2	3331000

DATE: 01/10/06
REV: 5/21/2007
DRAWN: JK/DT
CHK: RA/DP
PG 1 OF 1
FILE: H:\ENGSTANDARDS\06 SPECBOOK\300-DISTRIB_OH\330-3 PHS\C3.17

GROUP: PRIMARY - THREE PHASE - TANGENT
TYPE: SINGLE CROSSARM -10' FIBERGLASS - UPPER NEUTRAL

OPTIONS: DOUBLE CROSSARM -SEE C3.18

C3.17

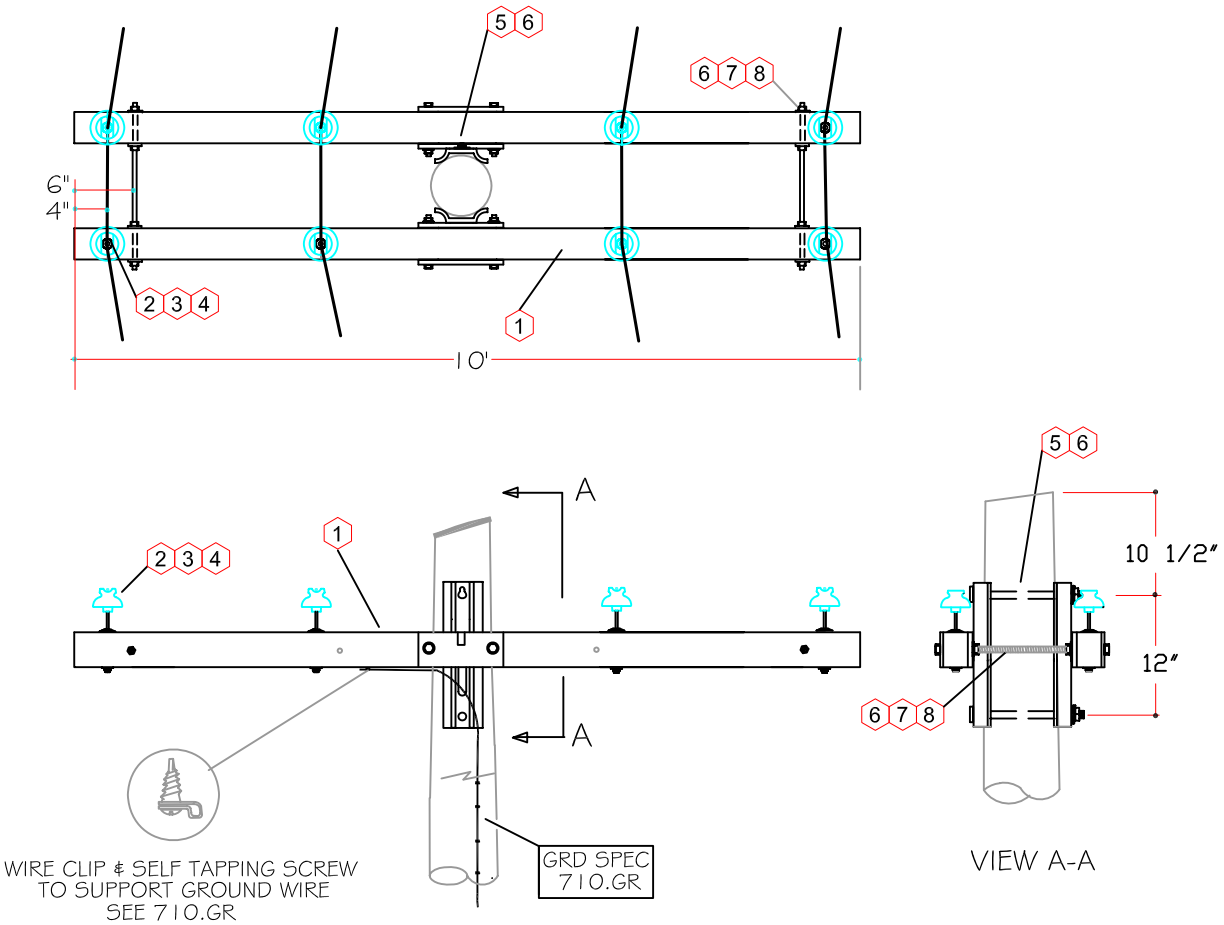

C3.18

(NOTE +C3.18 for 25KV)

ITEM	DESCRIPTION	QNTY C3.18	STOCK #
1	CROSSARM - FBRGLS - 10' x 3.5"x4.5"	2	1051100
2	PIN TYPE INSULATOR 15KV	8	4011500
+2	PIN TYPE INSULATOR 25KV	8	4012500
3	xxx - CROSSARM PIN	8	4500100
4	xxx TIES (SEE 1000.TY)	8	AS REQ'D
5	xxx - BOLT MACH - 14 X5/8"	2	3031400
6	xxx - WASHER - dbl coil lock - 5/8"	10	3330900
7	xxx - BOLT DA 22" x 5/8"	2	3082200
8	xxx - WASHER - SQ. 2-1/4"	8	3292000

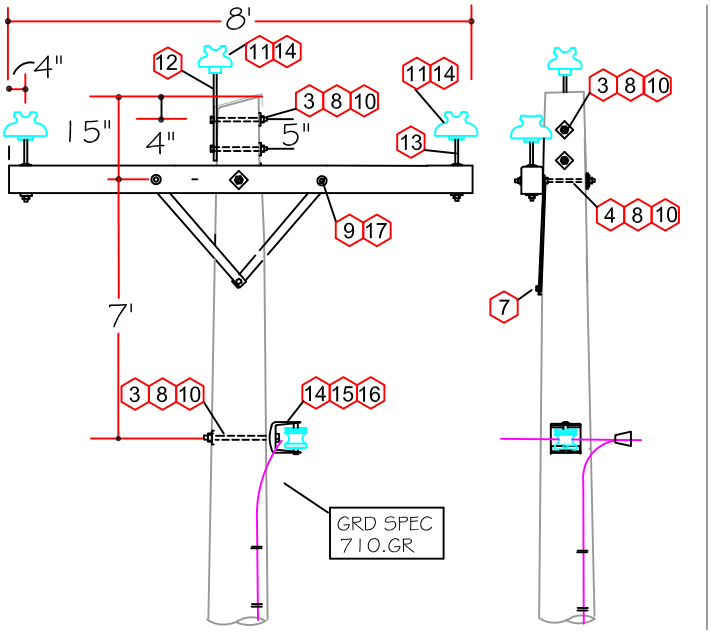

C3.21 (SNGL XRM FLAT BRC)

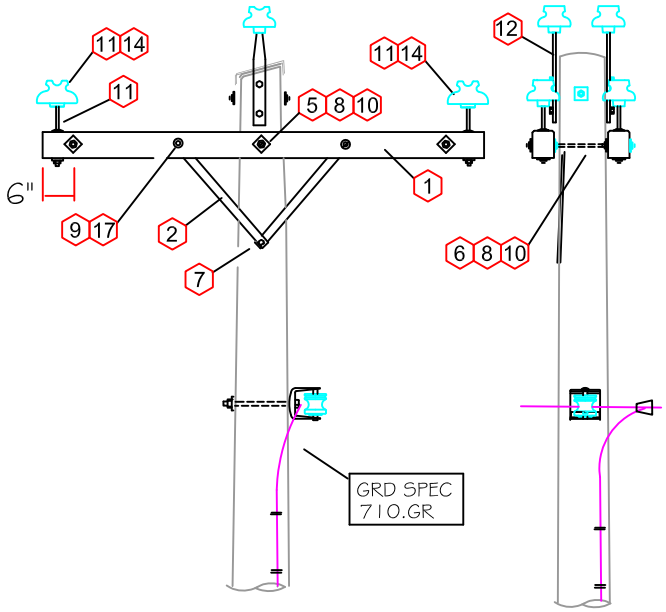

C3.23 (DBL XRM FLAT BRC)

(NOTE: for 556.5 ACSR and larger use V-Brace, See 3.22, 3.24))
(NOTE: USE A PLUS SIGN BEFORE THE ASSEMBLY NUMBER FOR 25KV APPLICATIONS, +C2-3...)

ITEM	DESCRIPTION	QUANTITY		STOCK #
		C3.21	C3.23	
1	CROSSARM - 8'x3"x4"	1	2	1040800
2	xxx - BRACE - FLAT	2	2	1302800
3	xxx- BOLT MACH - 12x5/8	3	3	3031200
4	xxx - BOLT MACH - 16 X 5/8	1	0	3031600
5	xxx - BOLT MACH - 20 X 5/8	0	1	3032000
6	xxx - BOLT DA - 22 X 5/8	0	2	3082200
7	xxx - LAG SCREW	1	2	3201500
8	XXX - WASHER - sq-2 1/4	3	11	3292000
9	XXX - WASHER - dbl coil lock - 3/8	2	2	3330700
10	XXX - WASHER - DBL COIL LOCK - 5/8	1	5	3330900
11	PIN TYPE INSULATOR 15KV	3	6	4011500
+11	PIN TYPE INSULATOR 25KV	3	6	4012500
12	xxx POLETOP PIN	1	2	4500200
13	xxx CROSSARM PIN	2	4	4500100
14	xxx TIE PROCEDURES (SEE 1000.TY)	2	4	**AS REQ'D**
15	xxx - SPOOL INSULATOR	1	1	4025000
16	xxx - CLEVIS	1	1	4025200
17	CARRIAGE BOLT 5" x 3/8"	1	2	3200500

FILE: H:\ENGSTANDARD_MASTER SPEC BOOK_MASTER SPECBOOK DWG\300-DISTRIB_OVERHEAD\330-THREE PHASE\C3.20 SET

DATE: 08/20/04
REV: 5/21/2007
DRAWN: JK/DT
CHK: RA/DP

PD #1 of Chatham County

PG 1 OF 1

GROUP: PRIMARY - THREE PHASE - TANGENT
TYPE: CROSSARM - LOWER NEUTRAL

OPTIONS: FLAT BRACE - SINGLE ARM — **C3.21**
FLAT BRACE - DOUBLE ARM — **C3.23**

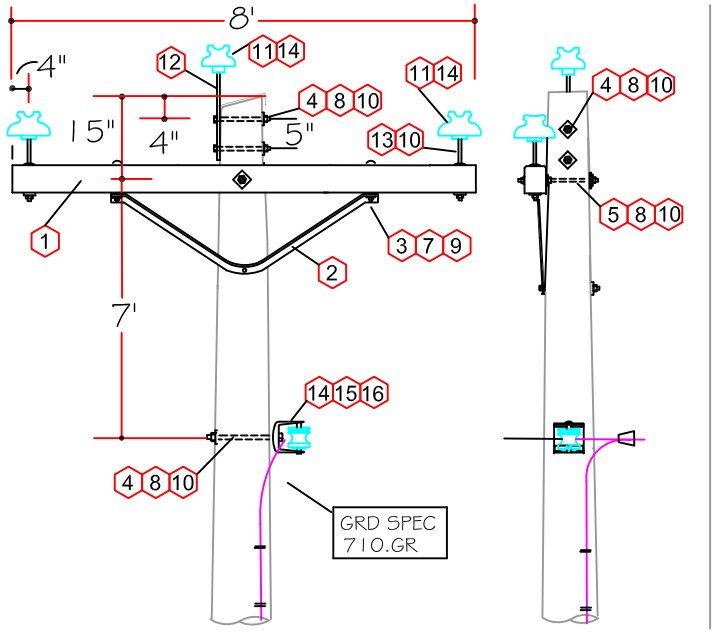

C3.22 (SNGL XRM, V-Brace)

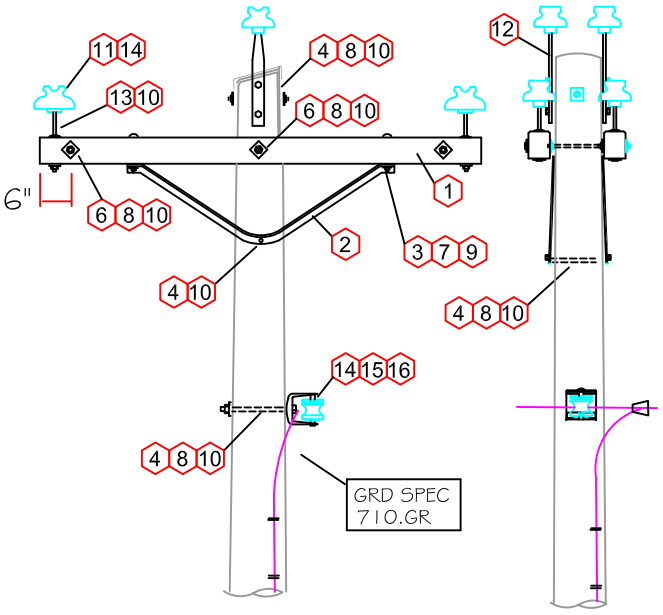

C3.24 (DBL XRM, V-Brace)

(NOTE: USE A PLUS SIGN BEFORE THE ASSEMBLY NUMBER FOR 25KV APPLICATIONS, +C2-3...)

ITEM	DESCRIPTION	QUANTITY C3.22	QUANTITY C3.24	STOCK #
1	CROSSARM - 8'x3"x4"	1	2	1040800
2	xxx - BRACE - V-brace	1	2	1306000
3	xxx - BOLT MACH 6 x 1/2"	2	4	3020600
4	xxx- BOLT MACH - 12 x 5/8	3	3	3031200
5	xxx - BOLT MACH - 16 X 5/8	1	0	3031600
6	xxx - BOLT DA - 22 X 5/8	0	3	3082200
7	xxx - ROUND WASHER - 1/2	2	4	3280800
8	XXX - WASHER - sq-2 1/4	3	11	3292000
9	xxx - WASHER - dbl coil lock - 1/2	2	2	3330800
10	XXX - WASHER - DBL COIL LOCK - 5/8	1	5	3330900
11	PIN TYPE INSULATOR 15KV	3	6	4011500
+11	PIN TYPE INSULATOR 25KV	3	6	4012500
12	xxx POLETOP PIN	1	2	4500200
13	xxx CROSSARM PIN	2	4	4500100
14	xxx TIE PROCEDURES (SEE 1000.TY)	2	4	**AS REQ'D**
15	xxx - SPOOL INSULATOR	1	1	4025000
16	xxx - CLEVIS	1	1	4025200

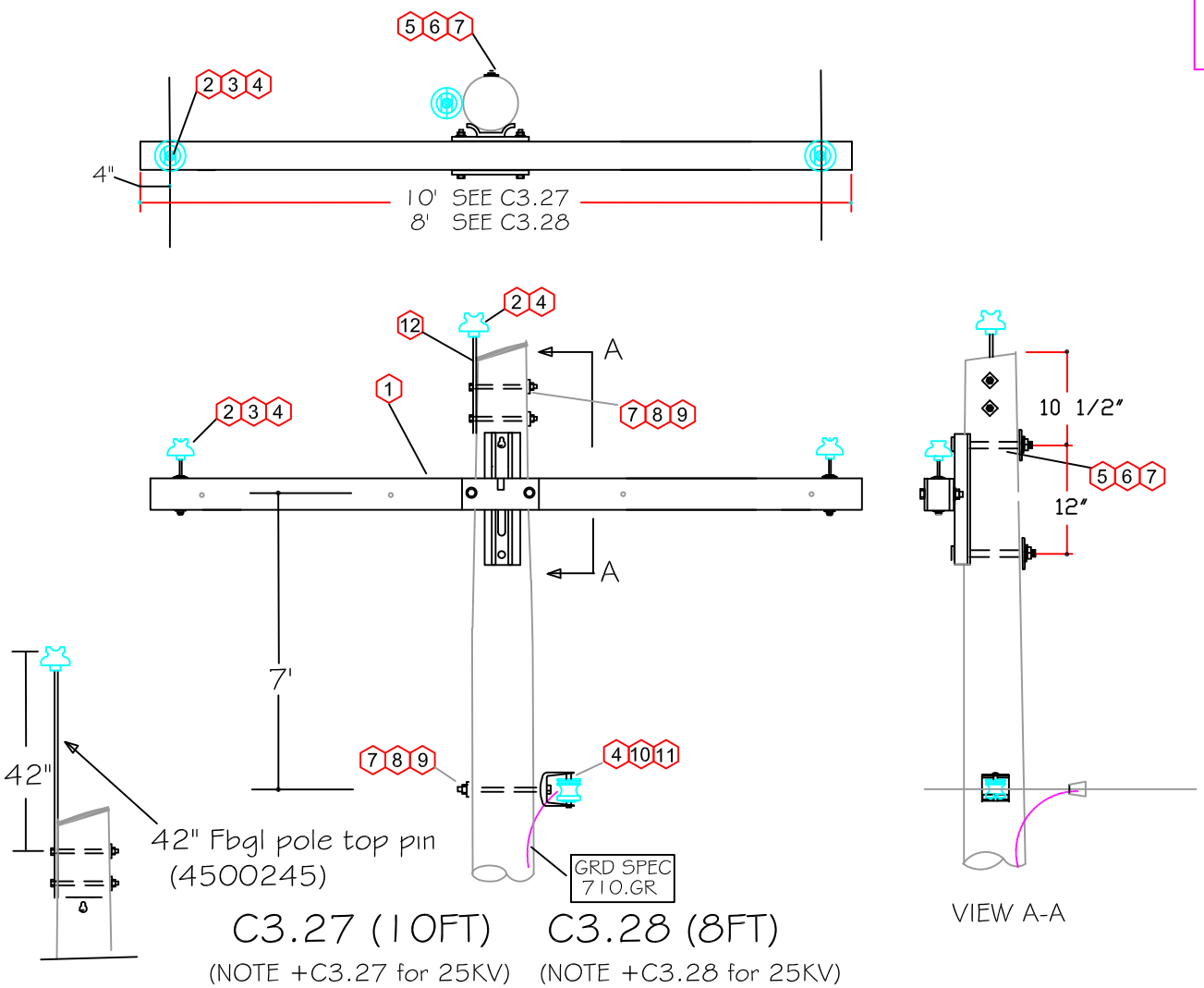

C3.27 (10FT) C3.28 (8FT)

(NOTE +C3.27 for 25KV) (NOTE +C3.28 for 25KV)

"SPREAD EAGLE SPECIAL" - Use pole 42" pole top pin :stock # 4500245

ITEM	DESCRIPTION	QNTY C3.27	QNTY C3.28	STOCK #
1a	CROSSARM - FBRGLS - 10' x 3-1/2"x4-1/2"	1	0	1051100
1b	CROSSARM - FBRGLS - 8' x 3-1/2"x4-1/2"	0	1	1040808
2	PIN TYPE INSULATOR 15KV	3	3	4011500
+2	PIN TYPE INSULATOR 25KV	3	3	4012500
3	xxx - CROSSARM PIN	2	2	4500100
4	xxx TIES (SEE 1000.TY)	4	4	**AS REQ'D**
5	xxx - BOLT MACH - 14 X5/8"	2	2	3031400
6	xxx - WASHER - sq-curv-3	2	2	3303900
7	xxx - WASHER - dbl coil lock - 5/8"	3	3	3330900
8	xxx - WASHER - sq-2/1/4	1	1	3292000
9	xxx - BOLT MACH - 12 X5/8"	3	3	3031200
10	xxx - SPOOL INSULATOR	1	1	4025000
11	xxx - CLEVIS	1	1	4025200

330

THREE PHASE - NARROW PROFILE DESIGN

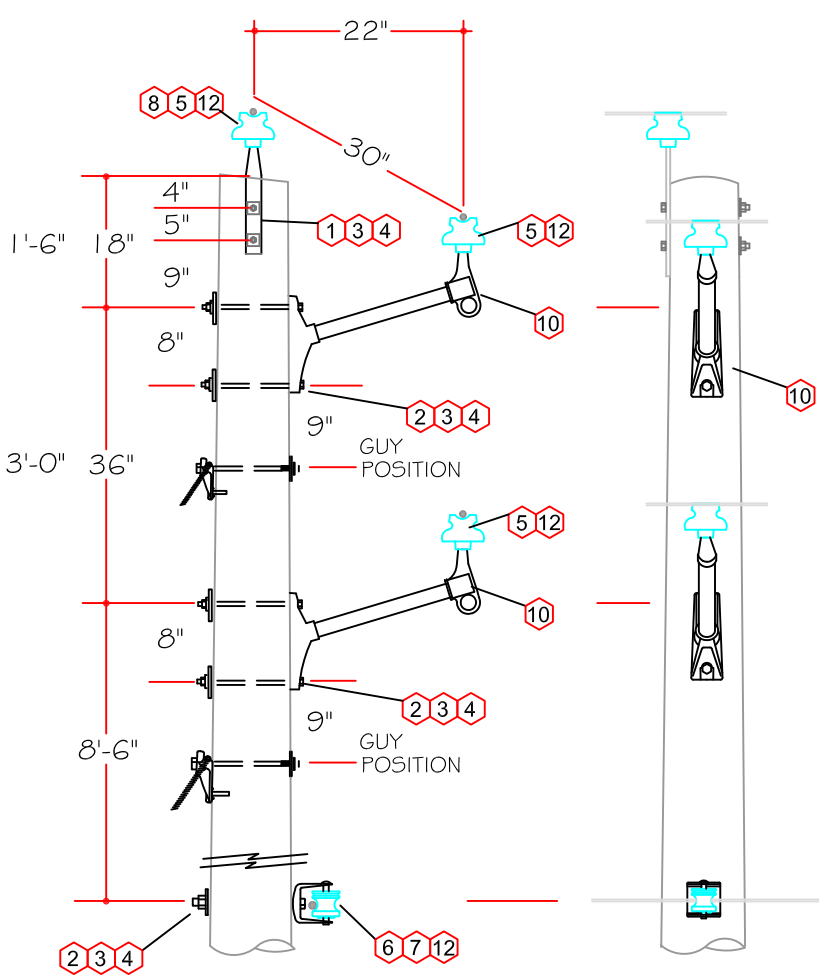

C3.3 0-15 deg angle
(+C3.3 for 25KV)

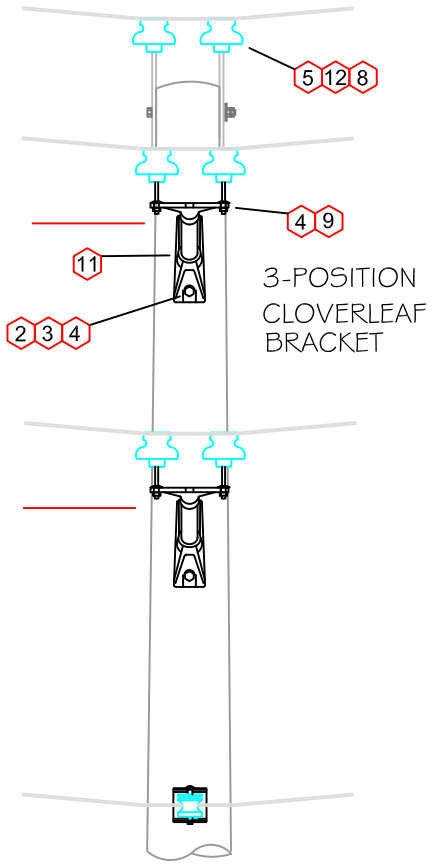

C3.4 15-30 deg angle
(+C3.4 for 25KV)

ITEM	DESCRIPTION	QUANTITY C3.3	QUANTITY C3.4	STOCK#
1	xxx BOLT MACH 10" x 5/8"	2	0	3031000
2	xxx BOLT MACH 12" x 5/8"	5	7	3031200
3	xxx SQ FLAT WASHER 2-1/4"	7	7	3292000
4	xxx DBL COIL 5/8" LOCK WASHER	7	7	3330900
5	PIN TYPE INSULATOR 15KV	3	6	4011500
5	PIN TYPE INSULATOR 25KV	3	6	4012500
6	xxx SPOOL INSULATOR	1	1	4025000
7	xxx CLEVIS	1	1	4025200
8	POLE TOP PIN	1	2	4500200
9	xxx SHORT SHANK DIST PIN	0	4	4500300
10	FIBERGLASS SIDEPOLE BRACKET PIN	2	0	4500610
11	FIBERGLASS SIDEPOLE BRACKET CLOVER	0	2	4500600
12	xxx TIES (See 1000.TY)	4	4	AS REQ'D

DATE: 05/15/12
REV: 05/15/12
DRAWN: DT
CHK: JP/GM
FILE: H:\ENGSTANDARDS\07 SPEC\300\330\C3.3

PD #1 of Gladwin County

PG 1 OF 1

GROUP: PRIMARY - THREE PHASE - TANGENT
TYPE: NARROW PROFILE - Three Phase

OPTIONS:
SINGLE PIN — **C3.3**
DOUBLE PIN — **C3.4**

330

THREE PHASE - NARROW PROFILE DESIGN "OPPOSED"

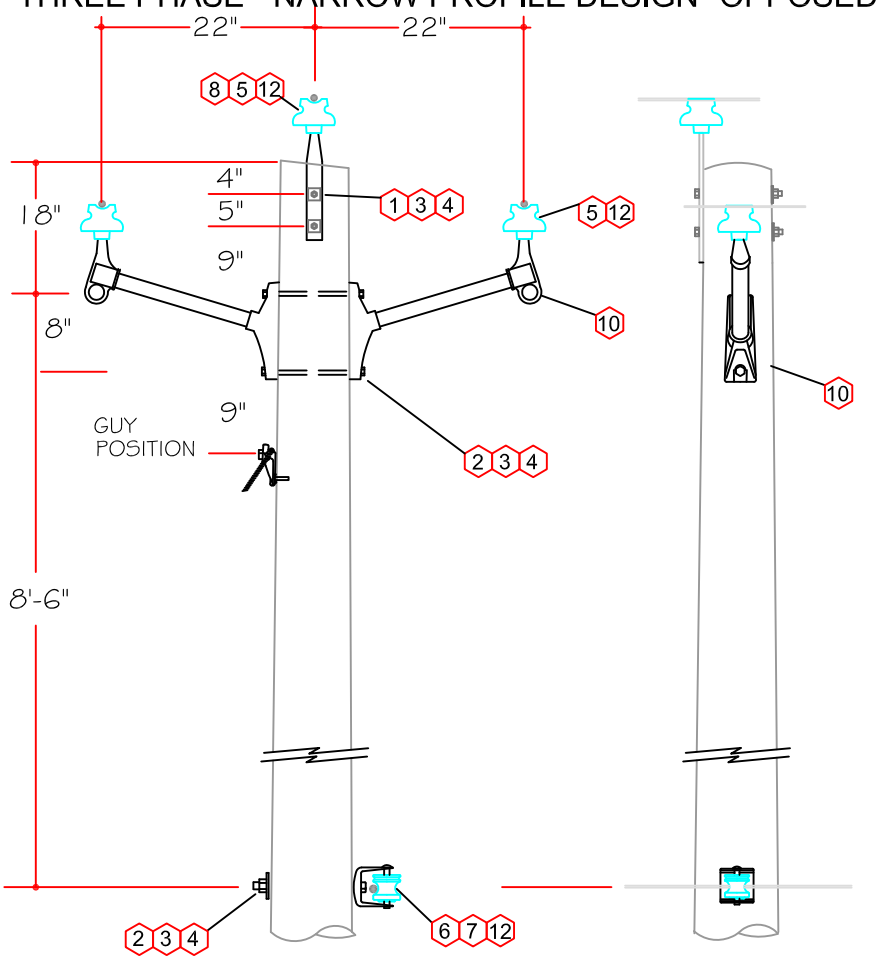

C3.5 0-15 deg angle
(+C3.5 for 25KV)

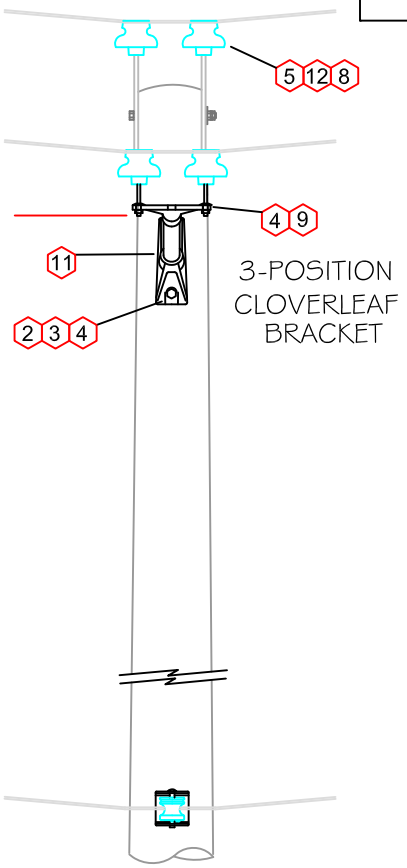

C3.6 15-30 deg angle
(+C3.6 for 25KV)

ITEM	DESCRIPTION	QUANTITY C3.5	QUANTITY C3.6	STOCK#
1	xxx BOLT MACH 10" x 5/8"	2	0	3031000
2	xxx BOLT MACH 12" x 5/8"	3	5	3031200
3	xxx SQ FLAT WASHER 2-1/4"	5	5	3292000
4	xxx DBL COIL 5/8" LOCK WASHER	5	5	3330900
5	PIN TYPE INSULATOR 15KV	3	6	4011500
5	PIN TYPE INSULATOR 25KV	3	6	4012500
6	xxx SPOOL INSULATOR	1	1	4025000
7	xxx CLEVIS	1	1	4025200
8	POLE TOP PIN	1	2	4500200
9	xxx SHORT SHANK DIST PIN	0	4	4500300
10	FIBERGLASS SIDEPOLE BRACKET PIN	2	0	4500610
11	FIBERGLASS SIDEPOLE BRACKET CLOVER	0	2	4500600
12	xxx TIES (See 1000.TY)	2	4	**AS REQ'D**

DATE: 05/15/12
REV: 05/15/12
DRAWN: DT
CHK: JP/GM
FILE: H:\ENGSTANDARDS\07 SPEC\300\330\C3.5

PD #1 of Baldwin County

PG 1
OF 1

GROUP: PRIMARY - THREE PHASE - TANGENT
TYPE: NARROW PROFILE "Opposed" - THREE PHASE

OPTIONS:		
	SINGLE PIN	**C3.5**
	DOUBLE PIN	**C3.6**

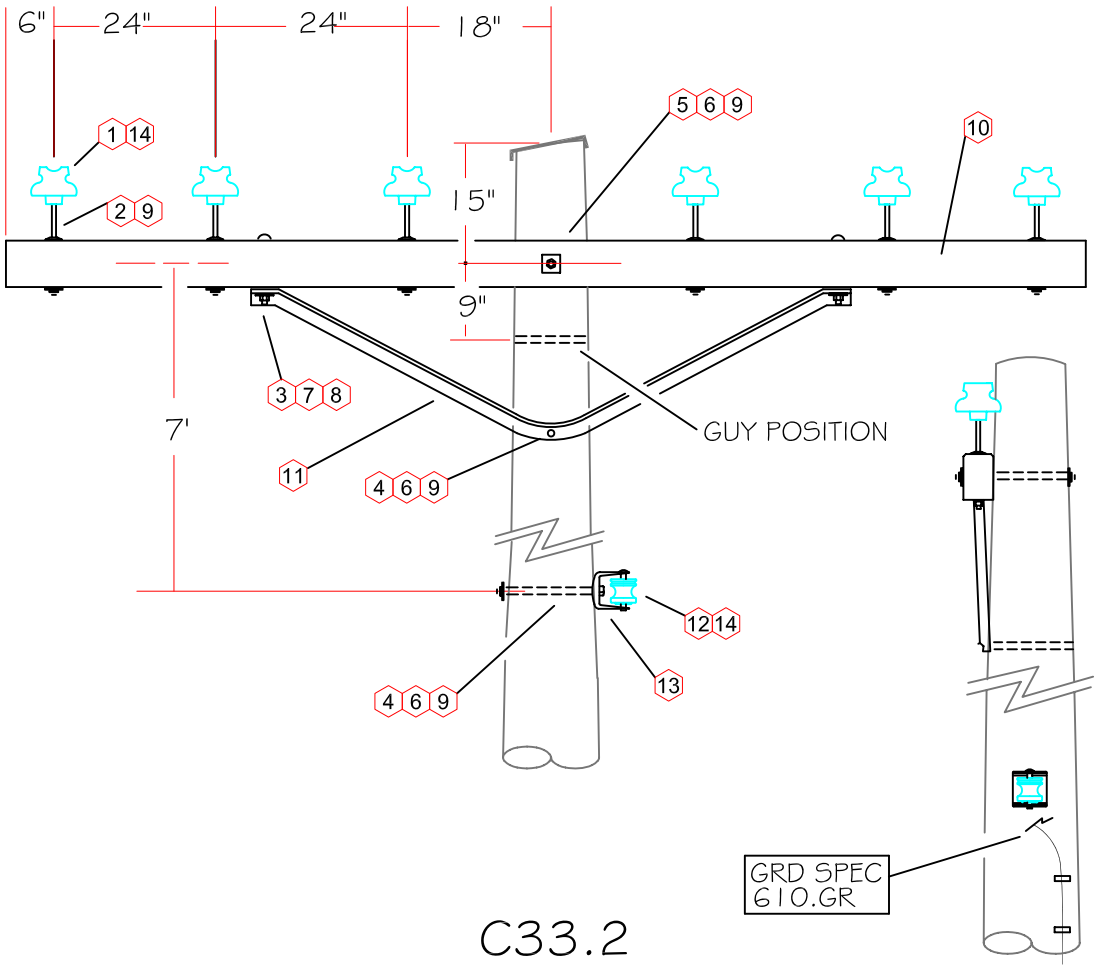

C33.2

(+C33.2 for 25KV)

ITEM	DESCRIPTION	QNTY C33.2	STOCK #
1	PIN TYPE INSULATOR 15KV	6	4011500
+1	PIN TYPE INSULATOR 25KV	6	4012500
2	xxx CROSS ARM PIN	6	4500100
3	xxx - BOLT MACH - 6 x 1/2	2	3020600
4	xxx - BOLT MACH - 12 X 5/8	2	3031200
5	xxx - BOLT MACH - 16 X 5/8	1	3031600
6	XXX - WASHER - SQ-2 1/4	4	3292000
7	XXX - WASHER - ROUND GALV-1/2	2	3280800
8	XXX - WASHER - DBL COIL LOCK - 1/2	2	3330800
9	XXX - WASHER - DBL COIL LOCK - 5/8	3	3330900
10	CROSSARM - 12' x 3"x4"	1	1041200
11	V BRACE - 72"	1	1306100
12	xxx - SPOOL INSULATOR	1	4025000
13	xxx -CLEVIS	1	4025200
14	xxx TIES (SEE 1000.TY)	6	**AS REQ'D**

DATE: 08/20/04
REV: 5/21/2007
DRAWN: JK/DT
CHK: RA/DP
PG 1 OF 1
FILE: H:\ENGSTANDARDS\06 SPECBOOK\300-DISTRIB_OH\330-3 PHS\C33.2-SET

GROUP: PRIMARY - THREE PHASE - TANGENT
TYPE: DOUBLE CIRCUIT - 12FT CROSSARM

OPTIONS:

C33.2

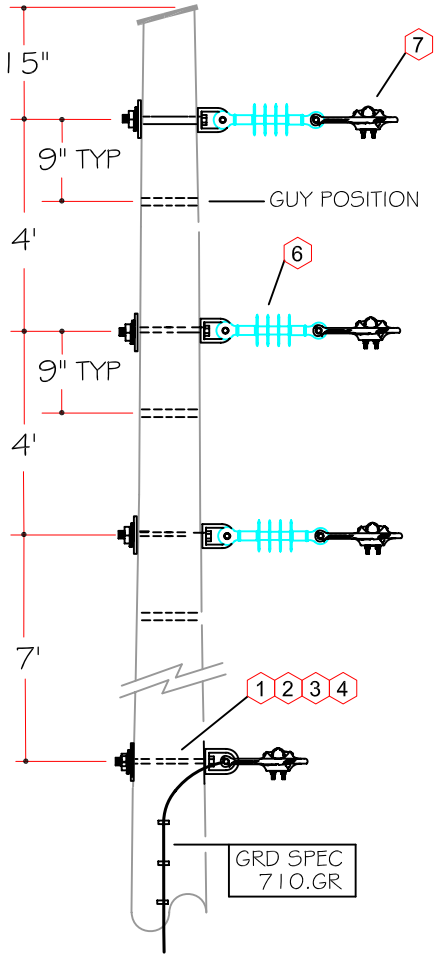

C4-1.1
BASIC DE

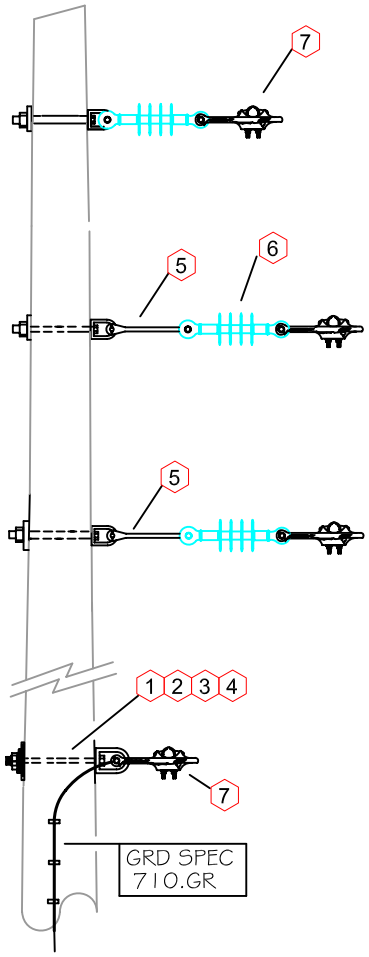

C4-1.2
DE + EXTENSION LINK

(NOTE: USE A PLUS SIGN BEFORE THE ASSEMBLY NUMBER FOR 25KV APPLICATIONS, +C4.-1.1...)

ITEM	DESCRIPTION	QUANTITY C4-1.1	QUANTITY C4-1.2	STOCK #
1	xxx - BOLT MACH - 12 X 5/8	4	4	3031200
2	XXX - WASHER - SQ CURV-3	4	4	3303900
3	XXX - WASH - DBL COIL LOCK - 5/8	4	4	3330900
4	XXX - D-EYE - 5/8	4	4	3990100
5	EXTENSION LINK	0	2	3992000
6	SUSPENSION INSUL - 15KV POLY	3	3	4021500
+6	SUSPENSION INSUL - 25KV POLY	3	3	4022500
7	DEADEND - BOLTED (SEE 1000.DE)	4	4	AS-REQ'D

NOTE: THE MAXIMUM SIZE OF CONDUCTOR THAT CAN BE USED IN THIS CONFIGURATION IS NO. 2 ACSR. FOR LARGER CONDUCTOR USE 8' FIBERGLASS DEADEND CONSTRUCTION, SEE C4-3.7

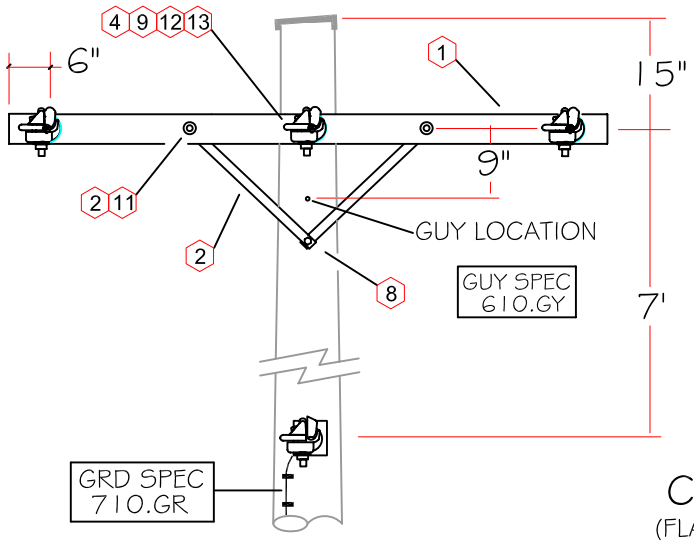

C4-3.3
(FLAT BRACE)

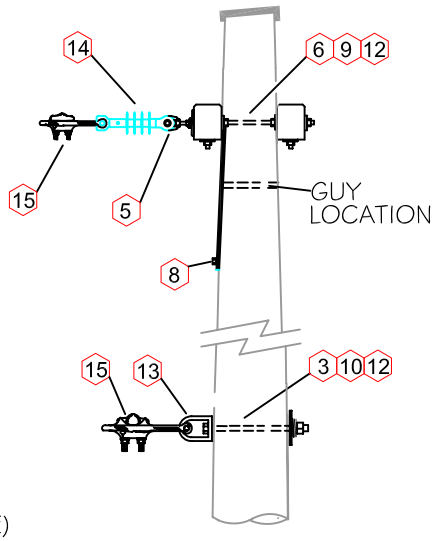

(NOTE: USE A PLUS SIGN BEFORE THE ASSEMBLY NUMBER FOR 25KV APPLICATIONS, +C4-3.3...)

ITEM	DESCRIPTION	QNTY C4-3.3	STOCK #
1	CROSSARM - 8'x3"x4"	2	1040800
2	XXX - BRACE - FLAT	2	1302800
3	xxx - BOLT MACH - 12 X 5/8	1	3031200
4	xxx - BOLT MACH - 22 X 5/8	1	3032200
5	XXX - EYENUT - 5/8	2	3231000
6	XXX - BOLT DA - 22 X 5/8	2	3082200
7	XXX - CARRIAGE BOLT - 5" X 3/8"	2	3200500
8	XXX - LAG SCREW 4" x 1/2"	1	3201500
9	XXX - WASHER - SQ-2 1/4	10	3292000
10	XXX - WASHER - SQ CURVE-3"	1	3303900
11	XXX - WASHER - DBL COIL LOCK - 3/8	2	3330700
12	XXX - WASHER - DBL COIL LOCK - 5/8	6	3330900
13	XXX - D-EYE - 5/8	2	3990100
14	SUSPENSION INSUL - 15KV POLY	3	4021500
+14	SUSPENSION INSUL - 25KV POLY	3	4022500
15	DEADEND - BOLTED	4	**AS-REQ'D**

GROUP: PRIMARY -THREE PHASE- DEADEND
TYPE: DOUBLE CROSSARM - LOWER NEUTRAL

OPTIONS: FIBERGLASS ARM - SEE C4-3.7

C4-3.3

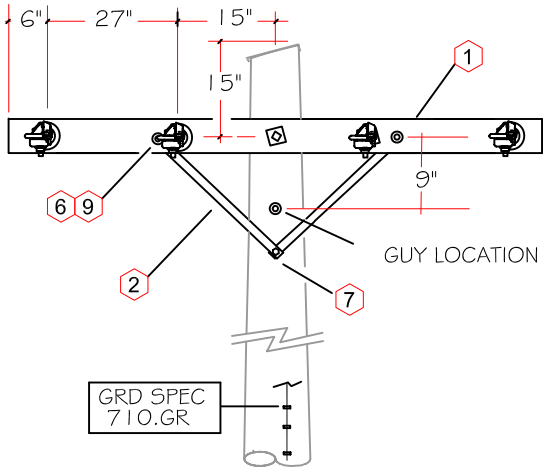

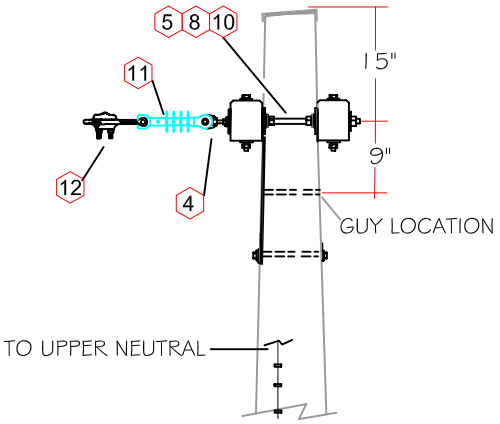

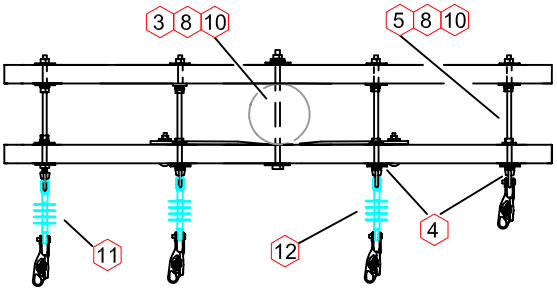

NOTE: THE MAXIMUM SIZE OF CONDUCTOR THAT CAN BE USED IN THIS CONFIGURATION IS NO. 2 ACSR. FOR LARGER CONDUCTOR USE 10' FIBERGLASS DEADEND CONSTRUCTION, SEE C4-3.17

C4-3.13
(FLAT BRACE)

(NOTE: USE A PLUS SIGN BEFORE THE ASSEMBLY NUMBER FOR 25KV APPLICATIONS, +C4-3.13...)

ITEM	DESCRIPTION	QNTY C4-3.13	STOCK #
1	CROSSARM -10'x3"x4"	2	1041000
2	xxx - BRACE - FLAT	4	1302800
3	xxx - BOLT MACH - 20 X 5/8	1	3032000
4	xxx - EYENUT - 5/8	4	3231000
5	xxx - BOLT DA - 22 X 5/8	4	3082200
6	xxx - CARRIAGE BOLT - 5" X 3/8"	4	3200500
7	xxx - LAG SCREW	2	3201500
8	xxx - WASHER - SQ-2 1/4	18	3292000
9	xxx - WASHER - dbl coil lock - 3/8	4	3330700
10	xxx - WASHER - DBL COIL LOCK - 5/8	9	3330900
11	SUSPENSION INSUL - 15KV POLY	3	4021500
+11	SUSPENSION INSUL - 25KV POLY	3	4022500
12	DEADEND - BOLTED	4	**AS-REQ'D**

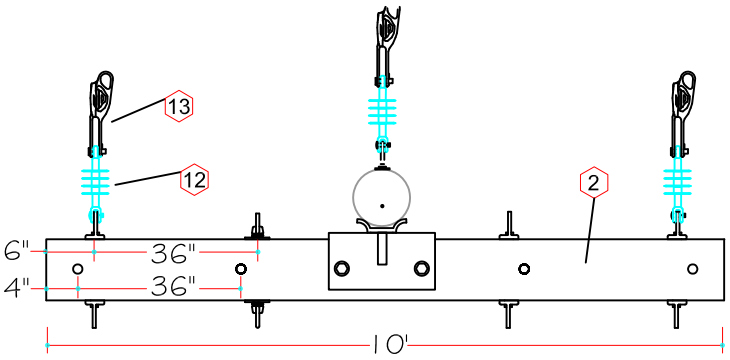

C4-3.6 - 8FT ARM

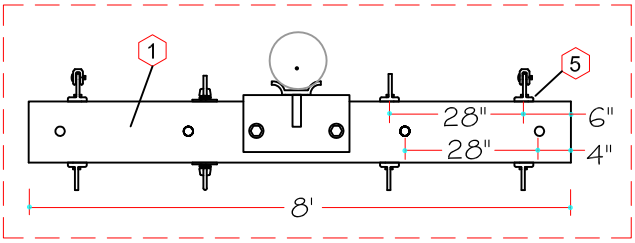

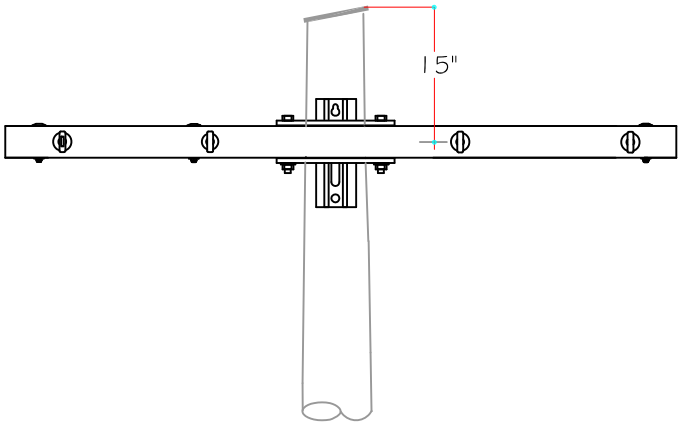

C4-3.7 - 10FT ARM

(+C4-3.7 for 25kv)

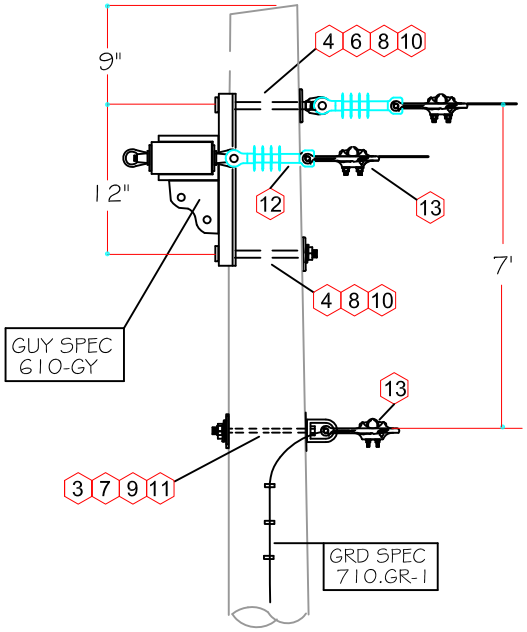

VIEW A-A

(NOTE: USE A PLUS SIGN BEFORE THE ASSEMBLY NUMBER FOR 25KV APPLICATIONS, +C4-3.6, +C4-3.7)

ITEM	DESCRIPTION	8-FT C4-3.6	10-FT C4-3.7	STOCK #
1	CROSSARM - FBRGLS DE ASSMBLY - 8' x 4"x7"	1	0	1095508
2	CROSSARM - FBRGLS DE ASSMBLY - 10' x 4"x7"	0	1	1095510
3	xxx - BOLT MACH - 12 X 5/8	1	1	3031200
4	xxx - BOLT MACH - 14 X 3/4	2	2	3041400
5	xxx - EYENUT - 5/8	1	1	3231000
6	xxx - EYENUT - 3/4	1	1	3232000
7	XXX - WASHER - sq curv-3	1	1	3303900
8	xxx - WASHER - sq-curv-4	2	2	3306000
9	xxx - WASHER - dbl coil lock - 5/8	1	1	3330900
10	xxx - WASHER - dbl coil lock - 3/4	2	2	3331000
11	XXX - D-EYE - 5/8	1	1	3990100
12	SUSPENSION INSUL - 15KV POLY	3	3	4021500
+12	SUSPENSION INSUL - 25KV POLY	3	3	4022500
13	DEADEND - BOLTED (SEE 1000.DE)	4	4	AS-REQ'D

REV: 5/8" TO 3/4" BOLT FOR SHAKESPEAR

DATE: 01/10/06
REV: 10/29/2010
DRAWN: JK/DT
CHK: RA/DP
PG 1 OF 1
FILE: H:\ENGSTANDARDS\06 SPECBOOK\300-DISTRIB_OH\330-3 PHS\C4-3.7

GROUP: PRIMARY - THREE PHASE - DEADEND
TYPE: SINGLE CROSSARM - FIBERGLASS- LOWER NEUTRAL

OPTIONS:		
	8' - FIBERGLASS DE ASSEMBLY	**C4-3.6**
	10' - FIBERGLASS DE ASSEMBLY	**C4-3.7**

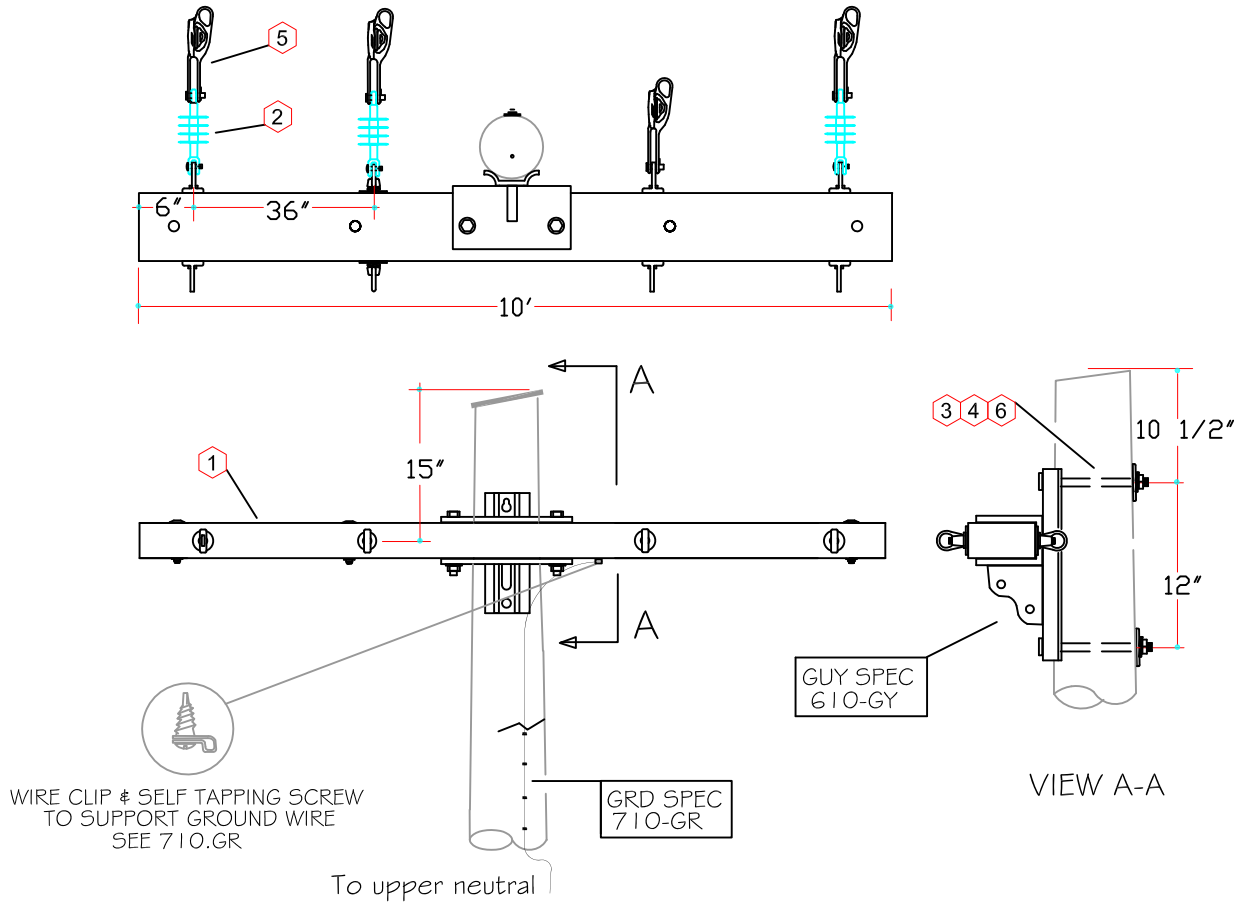

C4-3.17

(NOTE +C4-3.17 for 25KV)

ITEM	DESCRIPTION	QNTY C4-3.17	STOCK #
1	CROSSARM - FBRGLS DE ASSMBLY - 10' x 4"x7"	1	1095510
2	SUSPENSION INSUL - 15KV POLY	3	4021500
+2	SUSPENSION INSUL - 25KV POLY	3	4022500
3	xxx - BOLT MACH - 14 X 3/4	2	3041400
4	xxx - SQ CURV WASHER 4"	2	3306000
5	DEADEND - BOLTED	4	**AS-REQ'D**
6	XXX - WASHER - DBL COIL LOCK -3/4"	2	3331000

REV: 5/8" TO 3/4" FOR SHAKESPEAR ARM

DATE: 08/20/04
REV: 10/29/2010
DRAWN: JK/DT
CHK: RA/DP
PG 1 OF 1
FILE: H:\ENGSTANDARDS\06 SPECBOOK\300-DISTRIB_OH\330-3 PHS\C4-3.17

GROUP: PRIMARY - THREE PHASE - DEADEND
TYPE: SINGLE CROSSARM - 10ft FIBERGLASS - UPPER NEUTRAL

OPTIONS:

C4-3.17

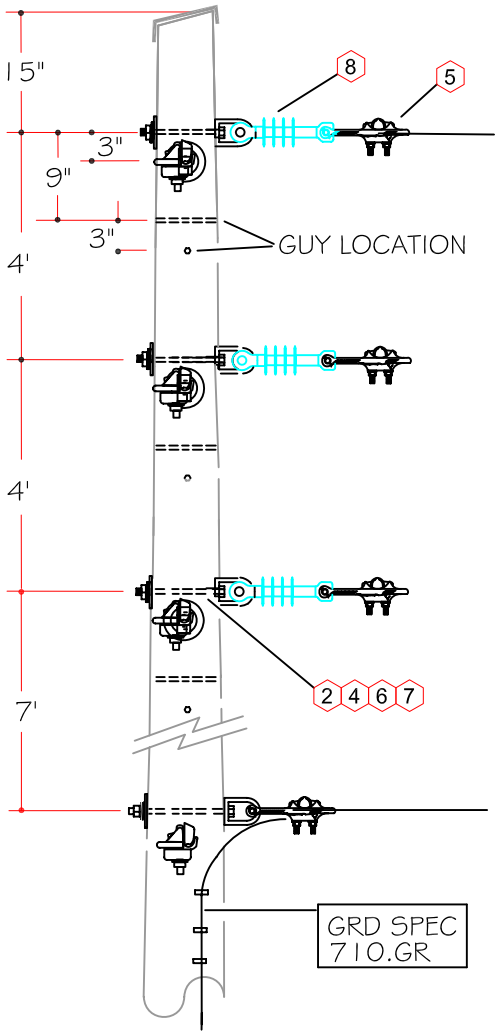

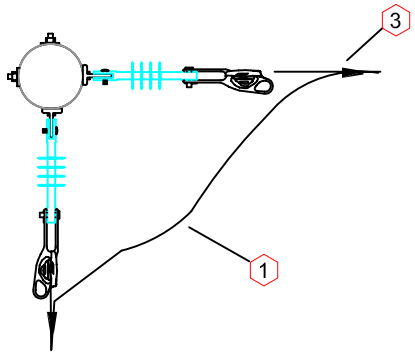

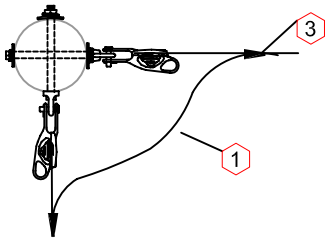

C5-1.2 (+C5-1.1 for 25KV)

ITEM	DESCRIPTION	QNTY C5-1.2	STOCK #
1	JUMPER	4	**AS REQ'D**
2	xxx - BOLT MACH - 12 X 5/8	8	3031200
3	xxx CONNECTOR - AMPACT	8	**AS REQ'D**
4	XXX - SQ CURV WASHER -4" x 13/16"	8	3306000
5	DEADEND - BOLTED	8	**AS REQ'D**
6	XXX - D-EYE - 5/8	8	3990100
7	XXX - WASHER - DBL COIL LOCK - 5/8"	8	3330900
8	SUSPENSION INSUL - 15KV POLY	6	4021500
+8	SUSPENSION INSUL - 25KV POLY	6	4022500

DATE: 08/20/04
REV: 5/21/2007
DRAWN: JK/DT
CHK: RA/DP
PG 1 OF 1
FILE: H:\ENGSTANDARDS\06 SPECBOOK\300-DISTRIB_OH\330-3 PHS\C5-1.2

GROUP: PRIMARY - THREE PHASE - DOUBLE DEADEND
TYPE: VERTICAL - 60-90deg

OPTIONS:

C5-1.2

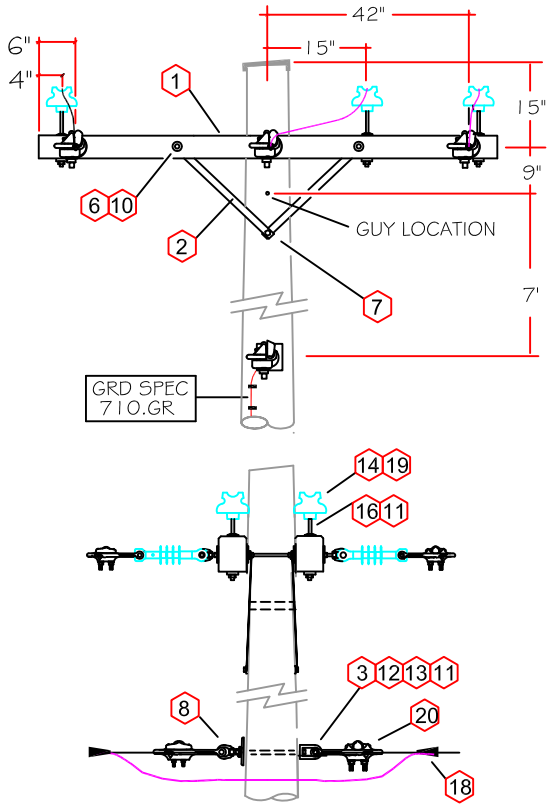

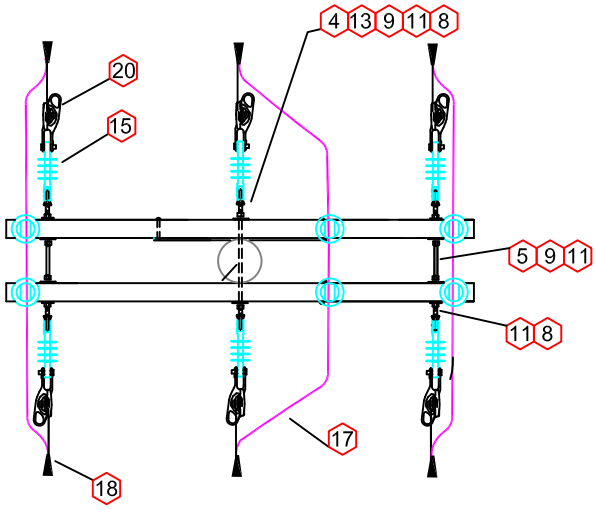

NOTE: THE MAXIMUM SIZE OF CONDUCTOR THAT CAN BE USED IN THIS CONFIGURATION IS NO. 4 ACSR. FOR LARGER CONDUCTOR USE 8' FIBERGLASS DEADEND CONSTRUCTION, SEE C5-3.7

C5-3.3 (Flat Brace)

(NOTE: USE A PLUS SIGN BEFORE THE ASSEMBLY NUMBER FOR 25KV APPLICATIONS, +C5-3.3...)

ITEM	DESCRIPTION	QNTY C5-3.3	STOCK #
1	CROSSARM - 8'x3"x4"	2	1040800
2	xxx - BRACE - FLAT	4	1302800
3	xxx - BOLT MACH - 12 X 5/8	1	3031200
4	xxx - BOLT MACH - 22 X 5/8	1	3032200
5	xxx - BOLT DA - 24 X 5/8	2	3082400
6	xxx - CARRIAGE BOLT - 5" X 3/8"	4	3200500
7	xxx - LAG SCREW	2	3201500
8	xxx - EYENUT - 5/8	6	3231000
9	XXX - WASHER - sq-2 1/4	10	3292000
10	XXX - WASHER - DBL COIL LOCK - 3/8	4	3330700
11	XXX - WASHER - DBL COIL LOCK - 5/8	8	3330900
12	XXX - WASHER - SQ CURV-3	1	3303900
13	XXX - D-EYE - 5/8	2	3990100
14	PIN TYPE INSULATOR 15KV	6	4011500
14	PIN TYPE INSULATOR 25KV	6	4012500
15	SUSPENSION INSUL - 15KV POLY	2	4021500
15	SUSPENSION INSUL - 25KV POLY	2	4022500
16	CROSSARM PIN	6	4500100
17	xxx JUMPER -	4	**AS REQ'D**
18	xxx CONNECTOR - AMPACT	8	**AS REQ'D**
19	xxx 4 SOL AL TIE WIRE	12FT	5430500
20	DEADEND - BOLTED (SEE 1000.DE)	8	**AS-REQ'D**

DATE: 08/20/04
REV: 11/14/2007
DRAWN: JK/DT
CHK: RA/DP
PG 1 OF 1
FILE: H:\ENGSTANDARDS\06 SPECBOOK\300-DISTRIB_OH\320-3 PHS\C5-3.3SET

GROUP: PRIMARY - THREE PHASE - DOUBLE DEADEND
TYPE: DOUBLE CROSSARM - LOWER NEUTRAL

OPTIONS: FIBERGLASS CROSSARM -SEE C5-3.7

C5-3.3

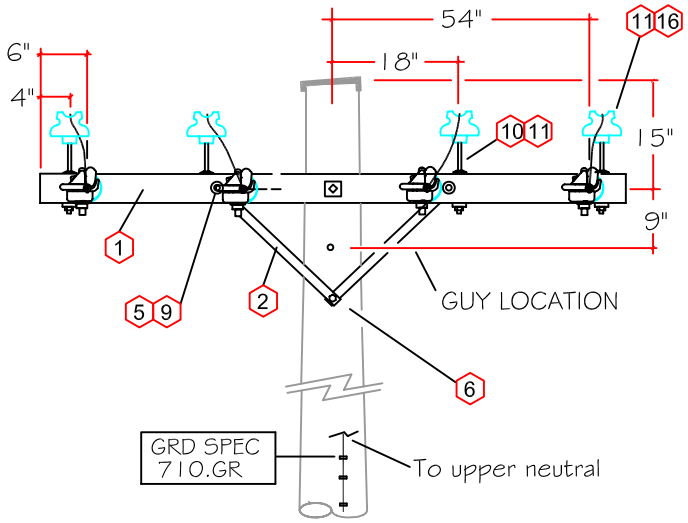

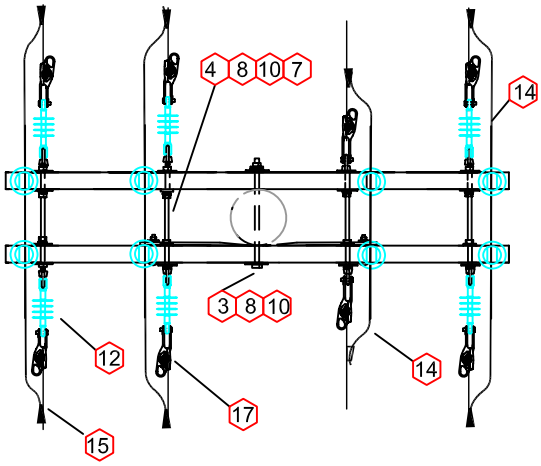

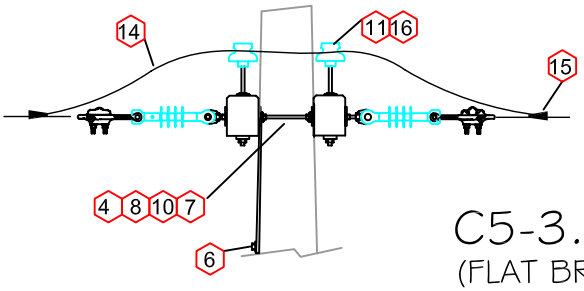

NOTE: THE MAXIMUM SIZE OF CONDUCTOR THAT CAN BE USED IN THIS CONFIGURATION IS NO. 4 ACSR. FOR LARGER CONDUCTOR USE 8' FIBERGLASS DEADEND CONSTRUCTION, SEE C5-3.17

C5-3.13
(FLAT BRACE)

(NOTE: USE A PLUS SIGN BEFORE THE ASSEMBLY NUMBER FOR 25KV APPLICATIONS, +C5-3.13...)

ITEM	DESCRIPTION	QNTY C5-3.13	STOCK #
1	CROSSARM - 10'x3"x4"	2	1041000
2	xxx - BRACE - FLAT	2	1302800
3	xxx - BOLT MACH - 20 X 5/8	1	3032000
4	xxx - BOLT DA - 24 X 5/8	4	3092400
5	xxx - CARRIAGE BOLT - 5" X 3/8"	2	3200500
6	xxx - LAG SCREW	1	3201500
7	xxx - EYENUT - 5/8	8	3231000
8	XXX - WASHER - sq-2 1/4	18	3292000
9	XXX - WASHER - DBL COIL LOCK - 3/8	2	3330700
10	XXX - WASHER - DBL COIL LOCK - 5/8	9	3330900
11	PIN TYPE INSULATOR 15KV	8	4011500
+11	PIN TYPE INSULATOR 25KV	8	4012500
12	SUSPENSION INSUL - 15KV POLY	6	4021500
+12	SUSPENSION INSUL - 25KV POLY	6	4022500
13	CROSSARM PIN	8	4500100
14	JUMPER -	4	**AS REQ'D**
15	CONNECTOR - AMPACT	8	**AS REQ'D**
16	xxx 4 SOL AL TIE WIRE	24FT	5430500
17	DEADEND - BOLTED (SEE 1000.DE)	8	**AS-REQ'D**

DATE: 08/20/04
REV: 11/14/2007
DRAWN: JK/DT
CHK: RA/DP
PG 1 OF 1
FILE: H:\ENGSTANDARDS\06 SPECBOOK\300-DISTRIB_OH\330-3 PHSC5-3.1-SET

GROUP: PRIMARY - THREE PHASE - DOUBLE DEADEND
TYPE: DOUBLE CROSSARM - UPPER NEUTRAL

OPTIONS: FIBERGLASS 10'FT ARM - SEE C5-3.17

C5-3.13

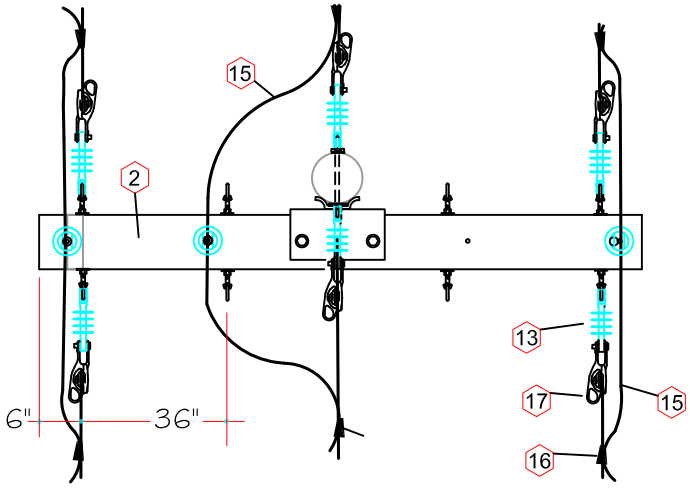

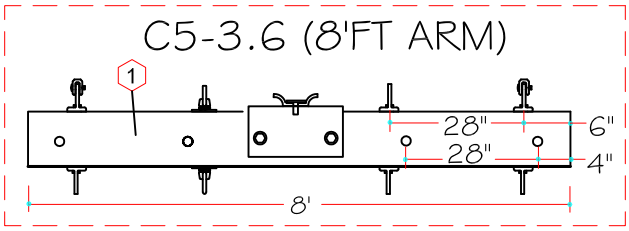

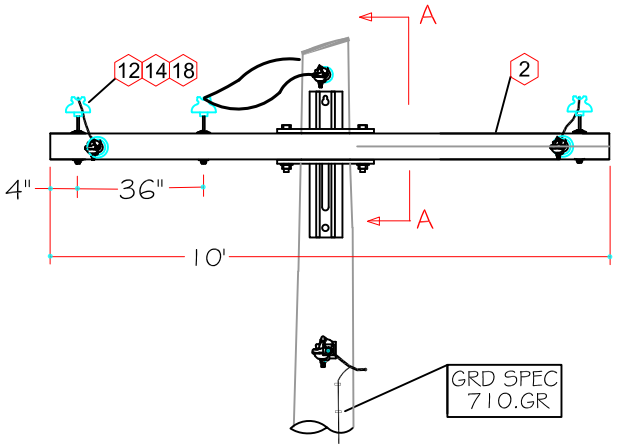

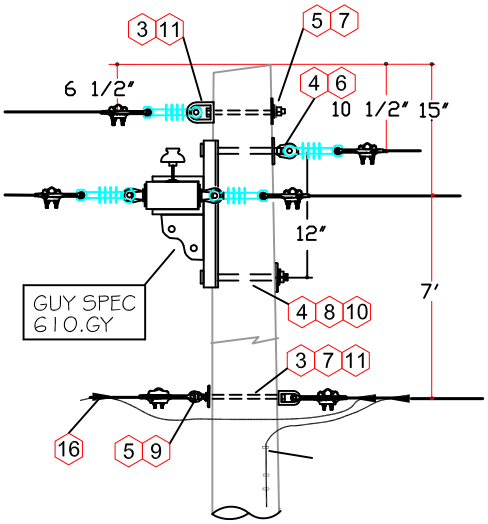

C5-3.7 (10FT ARM)

VIEW A-A

(NOTE: USE A PLUS SIGN BEFORE THE ASSEMBLY NUMBER FOR 25KVA APPLICATIONS, +C5-3.7...)

ITEM	DESCRIPTION	8FT C5-3.6	10FT C5-3.7	STOCK #
1	CROSSARM - FBRGLS DE ASSMBLY - 8 x 4"x7"	1	0	1095508
2	CROSSARM - FBRGLS DE ASSMBLY - 10' x 4"x7"	0	1	1095510
3	xxx - BOLT MACH - 14 X 5/8	2	2	3031400
4	xxx - BOLT MACH - 14 X 3/4	2	2	3041400
5	xxx - EYENUT - 5/8	2	2	3231000
6	xxx - EYENUT - 3/4	2	2	3232000
7	XXX - WASHER - sq curv-3"	2	2	3303900
8	xxx - WASHER - sq-curv-4"	2	2	3306000
9	xxx - WASHER - dbl coil lock - 5/8	2	2	3330900
10	xxx - WASHER - dbl coil lock - 3/4	2	2	3331000
11	xxx - D-EYE - 5/8	2	2	3990100
12	PIN TYPE INSULATOR 15KV	3	3	4011500
+12	PIN TYPE INSULATOR 25KV	3	3	4012500
13	SUSPENSION INSUL - 15KV POLY	6	6	4021500
+13	SUSPENSION INSUL - 25KV POLY	6	6	4022500
14	xxx CROSSARM PIN	3	3	4500100
15	JUMPER - (SEE 1200.CJ)	4	4	**AS REQ'D**
16	xxx CONNECTOR - AMPACT (SEE 1000.CN)	8	8	**AS REQ'D**
17	DEADEND - BOLTED (SEE 1000.DE)	8	8	**AS REQ'D**
18	xxx 4 SOL AL TIE WIRE	6FT	6FT	5430500

REV: 5/8" TO 3/4" BOLT FOR SHAKESPEARE

DATE: 01/10/06
REV: 10/29/2010
DRAWN: JK/DT
CHK: RA/DP
FILE: H:\ENGSTANDARDS\05 SPECBOOK\300-DISTRIB_OH\330-3 PHS\C5-3.7

PD #1 of Gladwin County

PG 1 OF 1

GROUP: PRIMARY - THREE PHASE - DOUBLE DEADEND
TYPE: SINGLE CROSSARM -FIBERGLASS - LOWER NEUTRAL

OPTIONS: 8'FT - FIBERGLASS — **C5-3.6**
10'FT - FIBERGLASS — **C5-3.7**

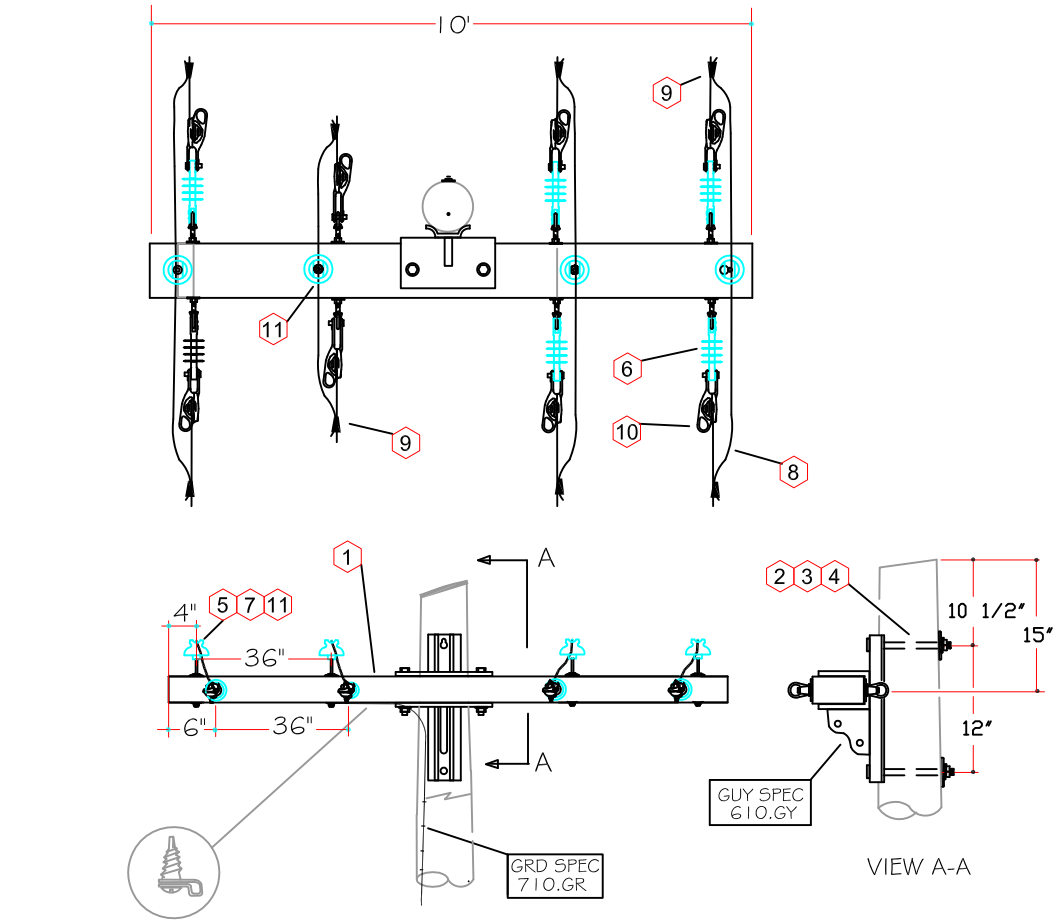

C5-3.17

(NOTE +C5-3.17 for 25KVA)

ITEM	DESCRIPTION	QNTY C5-3.17	STOCK #
1	CROSSARM - FBRGLS DE ASSMBLY - 10' x 4"x7"	1	1095510
2	xxx - BOLT MACH - 14 X 3/4	2	3041400
3	xxx - WASHER - sq-curv-4	2	3306000
4	xxx - WASHER - dbl coil lock - 3/4	2	3331000
5	PIN TYPE INSULATOR 15KV	4	4011500
+5	PIN TYPE INSULATOR 25KV	4	4012500
6	SUSPENSION INSUL - 15KV POLY	6	4021500
+6	SUSPENSION INSUL - 25KV POLY	6	4022500
7	xxx CROSSARM PIN	4	4500100
8	JUMPER - (SEE 1200.CJ)	4	**AS REQ'D**
9	xxx CONNECTOR - AMPACT (SEE 1000.CN)	8	**AS REQ'D**
10	DEADEND - BOLTED (SEE 1000.DE)	8	**AS REQ'D**
11	xxx 4 SOL AL TIE WIRE	8FT	5430500

REV: 5/8" TO 3/4" FOR SHAKESPEARE

DATE: 01/10/06
REV: 10/29/2010
DRAWN: JK/DT
CHK: RA/DP
FILE: H:\ENGSTANDARDS\06 SPECBOOK\300-DISTRIB_OH\330-3 PHS\C5-3.17

PD #1 of Chatham County

PG 1
OF 1

GROUP: PRIMARY - THREE PHASE - DOUBLE DEADEND
TYPE: SINGLE CROSSARM -10' FIBERGLASS - UPPER NEUTRAL

OPTIONS:

C5-3.17

300 - OVERHEAD DISTRIBUTION

340 - DOUBLE CIRCUIT - Three Phase:

TANGENT:

		ASSEMBLY/DWG	REF. CODE
D3	**TANGENT - SHARED LOWER NEUTRAL**		
	• SINGLE 12FT CROSSARM - VEE BRACE	D3.1	
	• FIBERGLAS 12FT CROSSARM - STEEL BRACKET	D3.6	
	• FIBERGLAS 14FT CROSSARM - STEEL BRACKET	D3.7	

DEADEND:

		ASSEMBLY/DWG	REF. CODE
D4	**DEADEND - SHARED LOWER NEUTRAL**		
	• 12FT WOOD ARM - VEE BRACE	D4.1	
	• 12FT FIBERGLASS ARM - STEEL BRACKET	D4.6	
	• 14FT FIBERGLASS ARM - STEEL BRACKET	D4.7	

DOUBLE DEADEND:

		ASSEMBLY/DWG	REF. CODE
D5	**DOUBLE DEADEND - SHARED LOWER NEUTRAL**		
	• 12FT WOOD ARM - VEE BRACE	D5.1	
	• 12FT FIBERGLASS - STEEL BRACKET	D5.6	
	• 14FT FIBERGLASS - STEEL BRACKET	D5.7	

* TO OBTAIN MATERIAL PRINTOUTS FOR 25KV, INCLUDE A PLUS (+) SIGN BEFORE THE 15KV ASSEMBLY SPECIFICATION NUMBER

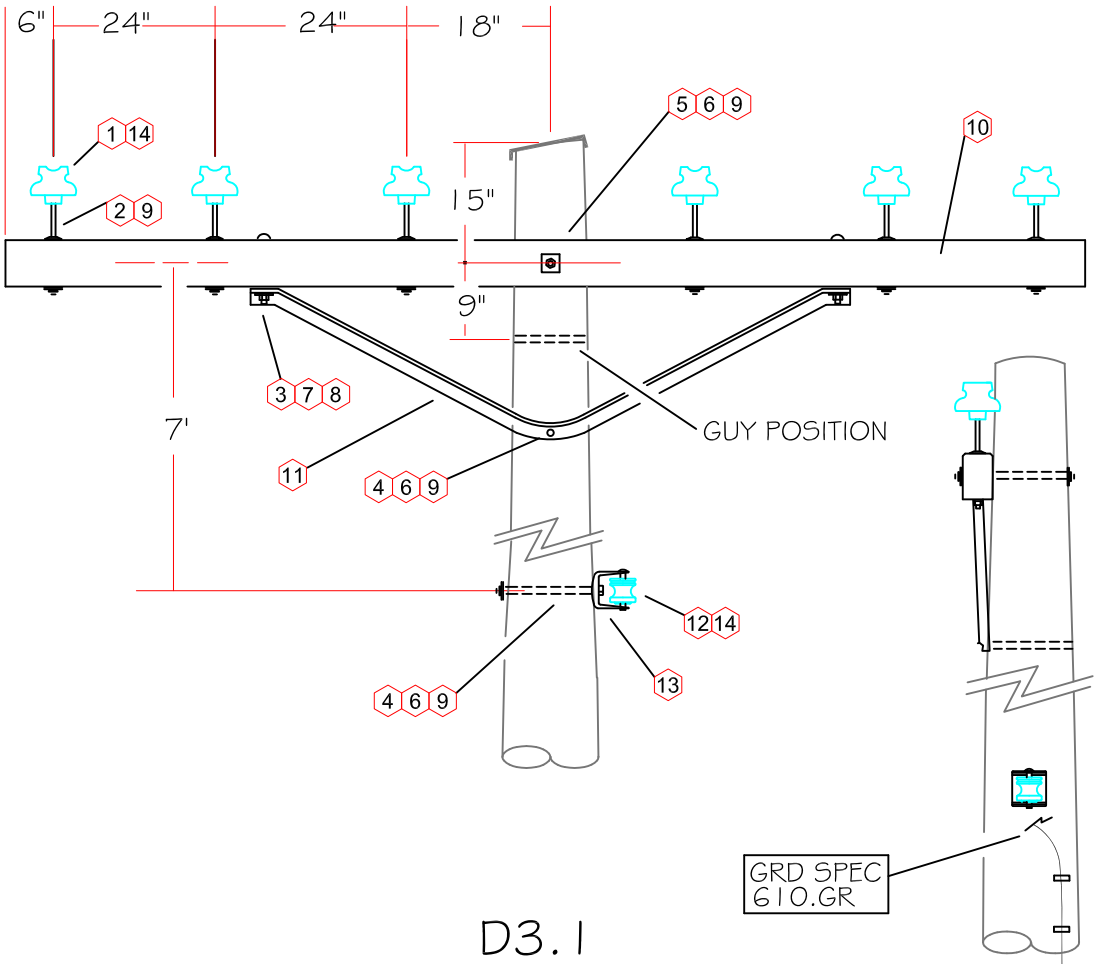

D3.1

(+D3.1 for 25KV)

ITEM	DESCRIPTION	QNTY D3.1	STOCK #
1	PIN TYPE INSULATOR 15KV	6	4011500
+1	PIN TYPE INSULATOR 25KV	6	4012500
2	xxx CROSS ARM PIN	6	4500100
3	xxx - BOLT MACH - 6 x 1/2	2	3020600
4	xxx - BOLT MACH - 12 X 5/8	2	3031200
5	xxx - BOLT MACH - 16 X 5/8	1	3031600
6	XXX - WASHER - SQ-2 1/4	4	3292000
7	XXX - WASHER - ROUND GALV-1/2	2	3280800
8	XXX - WASHER - DBL COIL LOCK - 1/2	2	3330800
9	XXX - WASHER - DBL COIL LOCK - 5/8	3	3330900
10	CROSSARM - 12' x 3"x4"	1	1041200
11	V BRACE - 72"	1	1306100
12	xxx - SPOOL INSULATOR	1	4025000
13	xxx -CLEVIS	1	4025200
14	xxx TIES (SEE 1000.TY)	6	AS REQ'D

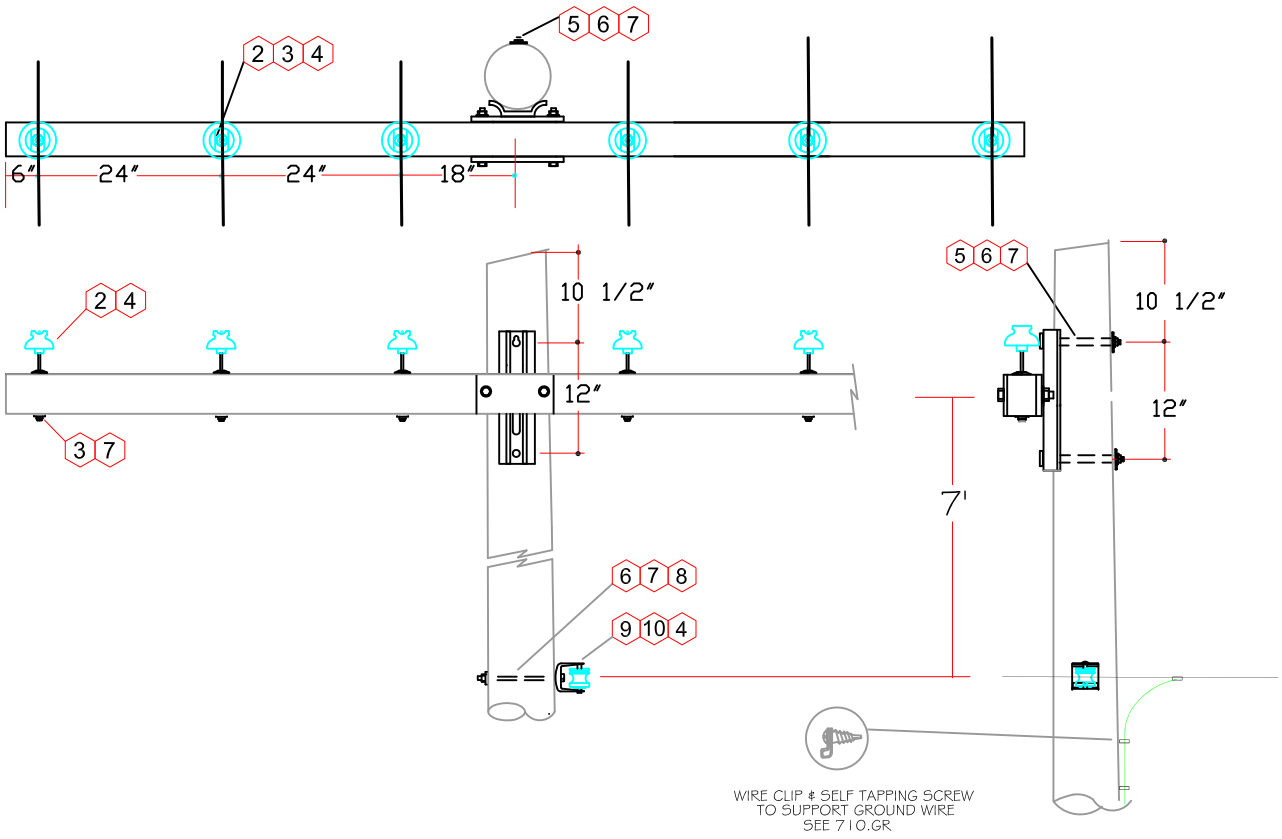

(NOTE +D3.6, +D3.7 for 25KV)

ITEM	DESCRIPTION	12-FT D3.6	14-FT D3.7	STOCK #
1	CROSSARM - Fiberglass HD DBL C- 12' x 4"x7"	1	0	
2	CROSSARM - Fiberglass HD DBL C- 14' x 4"x7"	0	1	
3	xxx - BOLT MACH - 12 X 5/8	1	1	3031200
4	xxx - BOLT MACH - 16 X 3/4	2	2	3041600
5	xxx - EYENUT - 5/8	1	1	3231000
6	xxx - EYENUT - 3/4	2	2	3232000
7	XXX - WASHER - sq curv-3	1	1	3303900
8	xxx - WASHER - sq-curv-4	2	2	3306000
9	xxx - WASHER - dbl coil lock - 5/8	1	1	3330900
10	xxx - WASHER - dbl coil lock - 3/4	2	2	3331000
11	PIN TYPE INSULATOR 15KV	6	6	4011500
+11	PIN TYPE INSULATOR 25KV	6	6	4012500
12	xxx - CROSSARM PIN	6	6	4500100
13	xxx - SPOOL INSULATOR	1	1	4025200
14	xxx - CLEVIS	1	1	4025200
15	TIES (SEE 1000.TY)	7	7	AS-REQ'D

DATE: 01/10/06
REV: 05/20/07
DRAWN: JK/DT
CHK: RA/DP
PG 1 OF 1
FILE: H:\ENGSTANDARDS\06 SPECBOOK\300-DISTRIB_OH\330-3 PHS\C3.6

GROUP: PRIMARY - THREE PHASE - TANGENT
TYPE: DOUBLE CIRCUIT - SHARED LOWER NEUTRAL

OPTIONS:		
	12' FIBERGLASS CROSSARM	**D3.6**
	14' FIBERGLASS CROSSARM	**D3.7**

DOUBLE CIRCUIT

340

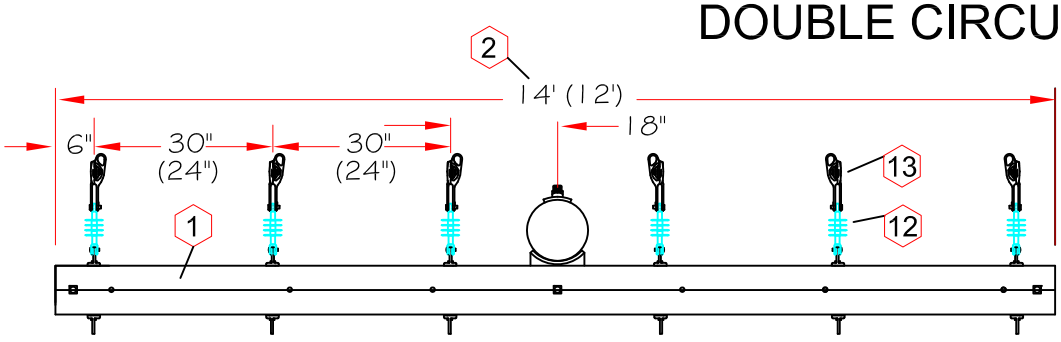

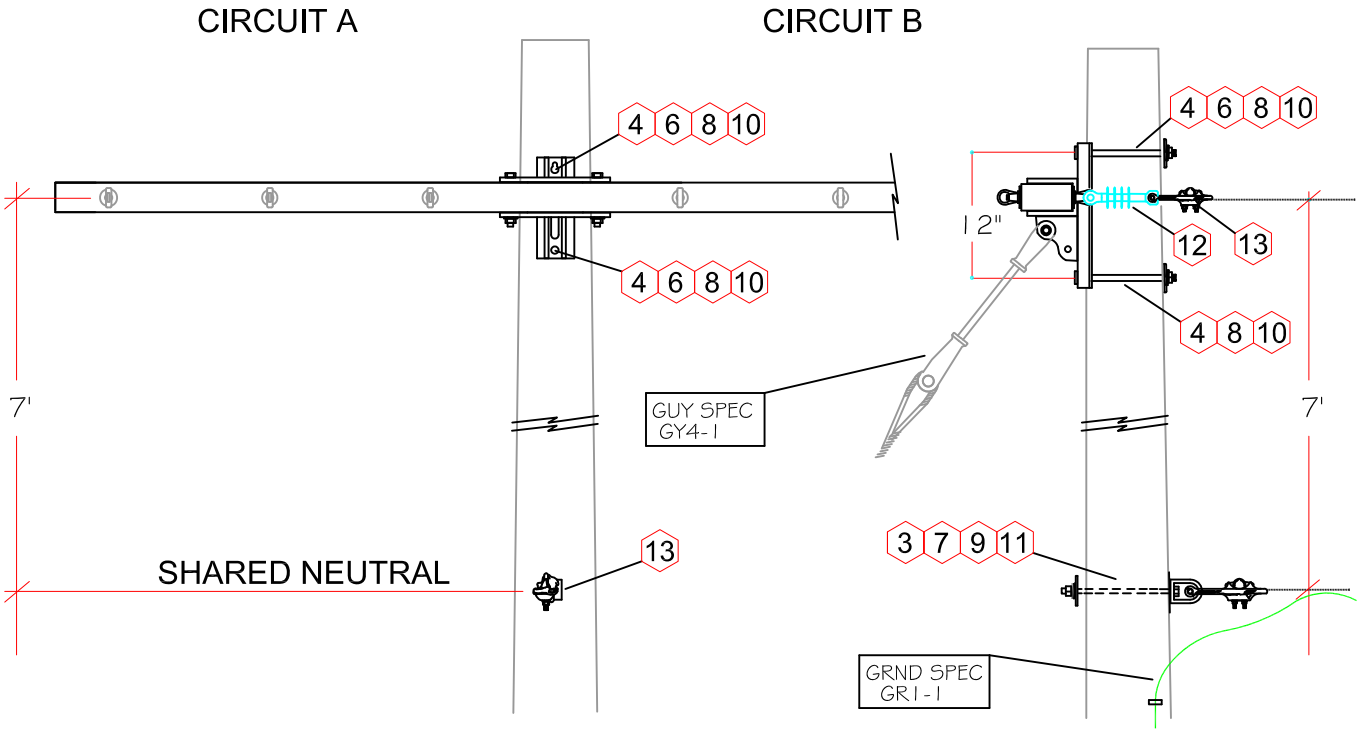

(NOTE: USE A PLUS SIGN BEFORE THE ASSEMBLY NUMBER FOR 25KV APPLICATIONS, +D5.6, +D5.7)

ITEM	DESCRIPTION	12-FT D4.6	14-FT D4.7	STOCK #	
1	CROSSARM - FBRGLS DE ASSMBLY - 12' x 4"x7"	1	0	~~1095008~~	1095012
2	CROSSARM - FBRGLS DE ASSMBLY - 14' x 4"x7"	0	1	~~1095500~~	1095014
3	xxx - BOLT MACH - 12 X 5/8	1	1	3031200	
4	xxx - BOLT MACH - 14 X 3/4	2	2	3041400	
5	xxx - EYENUT - 5/8	1	1	3231000	
6	xxx - EYENUT - 3/4	2	2	3232000	
7	XXX - WASHER - sq curv-3	1	1	3303900	
8	xxx - WASHER - sq-curv-4	2	2	3306000	
9	xxx - WASHER - dbl coil lock - 5/8	1	1	3330900	
10	xxx - WASHER - dbl coil lock - 3/4	2	2	3331000	
11	XXX - D-EYE - 5/8	1	1	3990100	
12	SUSPENSION INSUL - 15KV POLY	6	6	4021500	
+12	SUSPENSION INSUL - 25KV POLY	6	6	4022500	
13	DEADEND - BOLTED (SEE 1000.DE)	6	6	**AS-REQ'D**	

REV: 5/8" TO 3/4" BOLT FOR SHAKESPEAR

DATE: 01/10/06
REV: 10/29/2010
DRAWN: JK/DT
CHK: RA/DP
PG 1 OF 1
FILE: H:\ENGSTANDARDS\06 SPECBOOK\300-DISTRIB_OH\334\D4.6

GROUP: PRIMARY - THREE PHASE - DOUBLE CIRCUIT
TYPE: SINGLE CROSSARM - FIBERGLASS- LOWER NEUTRAL

OPTIONS:		
	12' - FIBERGLASS DE ASSEMBLY	**D4.6**
	14' - FIBERGLASS DE ASSEMBLY	**D4.7**

DOUBLE CIRCUIT

340

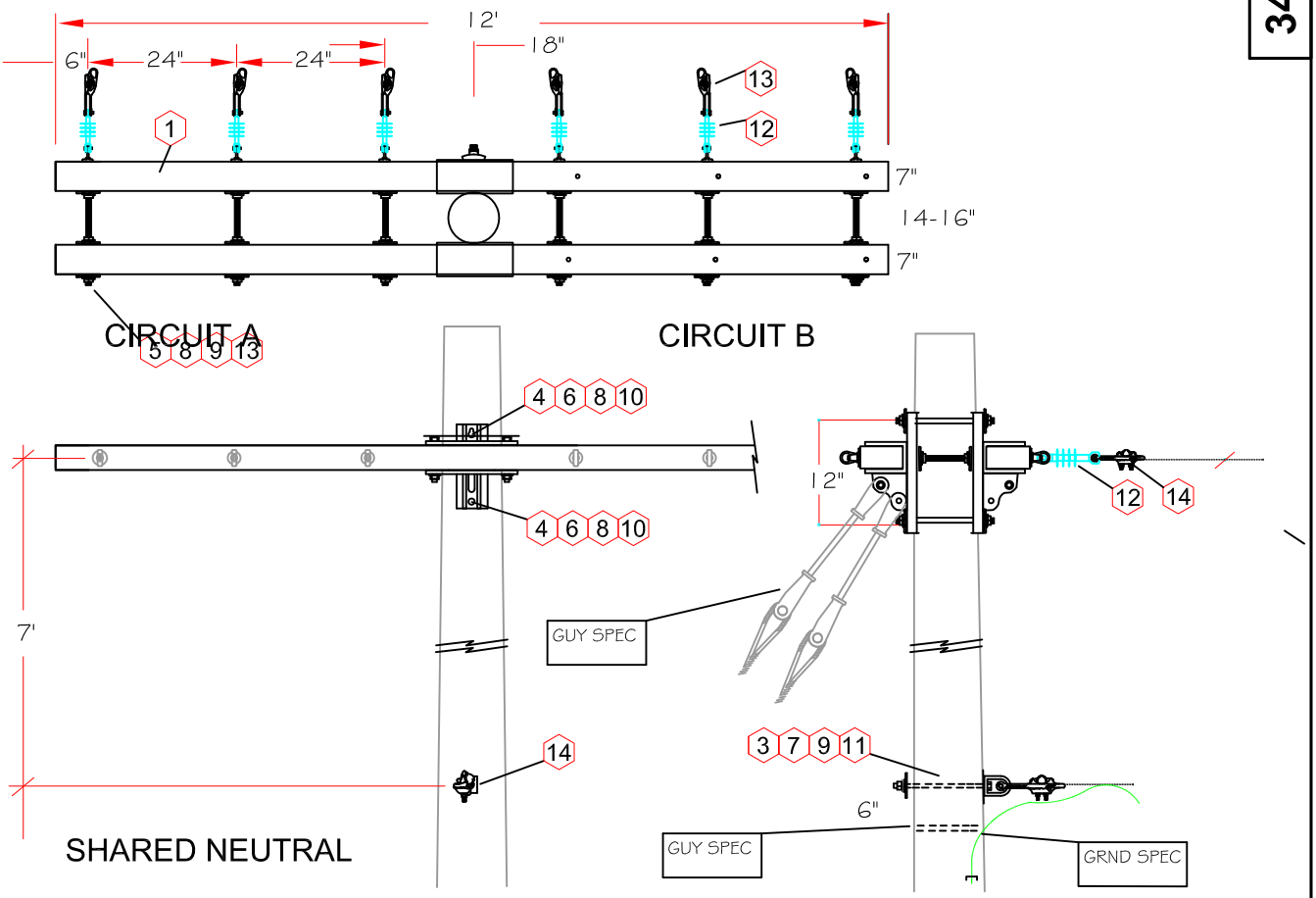

ITEM	DESCRIPTION	12-FT D4.8	STOCK #
1	CROSSARM - FBRGLS DE ASSMBLY - 12' x 4"x7"	2	1095612
2	CROSSARM - FBRGLS DE ASSMBLY - 14' x 4"x7"	0	na
3	xxx - BOLT MACH - 16 X 5/8	1	3031600
4	xxx - BOLT MACH - 22 X 3/4 DA	2	3082200
5	xxx - EYENUT - 5/8	13	3231000
6	xxx - EYENUT - 3/4	2	3232000
7	XXX - WASHER - sq curv-3	1	3303900
8	xxx - WASHER - sq-curv-4	27	3306000
9	xxx - WASHER - dbl coil lock - 5/8	19	3330900
10	xxx - WASHER - dbl coil lock - 3/4	2	3331000
11	XXX - D-EYE - 5/8	1	3990100
12	SUSPENSION INSUL - 15KV POLY	6	4021500
+12	SUSPENSION INSUL - 25KV POLY	6	4022500
13	xxx - BOLT MACH - 28 X 5/8 DA	6	3082800
14	DEADEND - BOLTED (SEE 1000.DE)	6	**AS-REQ'D**

REV: 5/8" TO 3/4" BOLT FOR SHAKESPEAR

DATE: 01/10/06
REV: 10/29/2010
DRAWN: JK/DT
CHK: RA/DP
PD #1 of Chatham County
PG 1 OF 1
FILE: H:\ENGSTANDARDS\06 SPECBOOK\300-DISTRIB_OH\334\D4.6

GROUP: PRIMARY - THREE PHASE - DOUBLE CIRCUIT
TYPE: DOUBLE CROSSARM - FIBERGLASS- LOWER NEUTRAL

OPTIONS: 12' - FIBERGLASS DE ASSEMBLY

D4.8

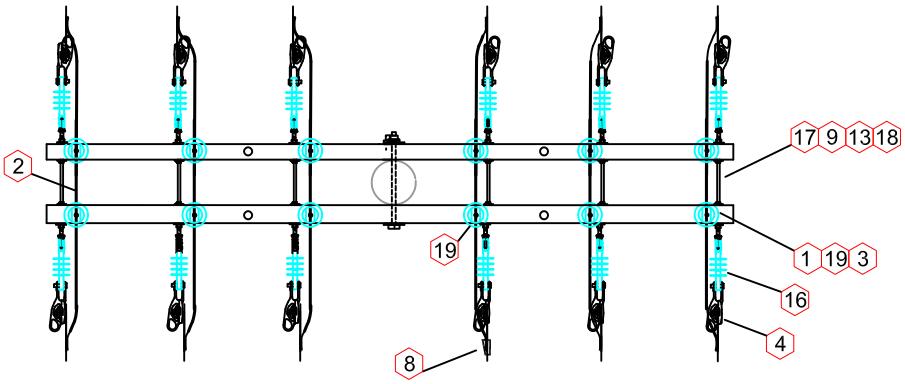

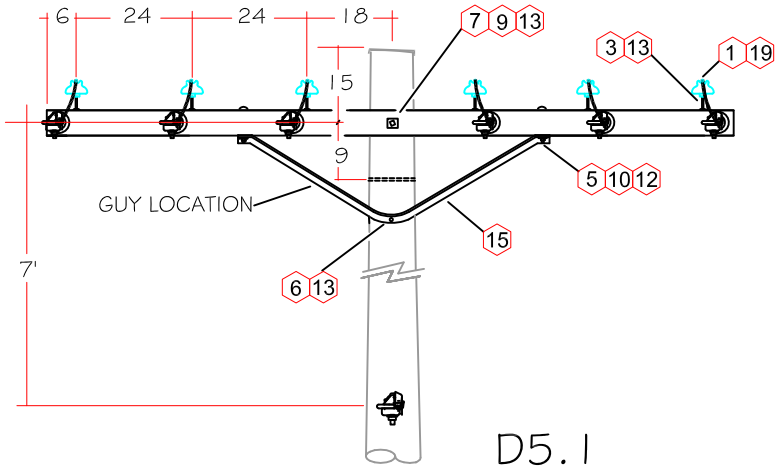

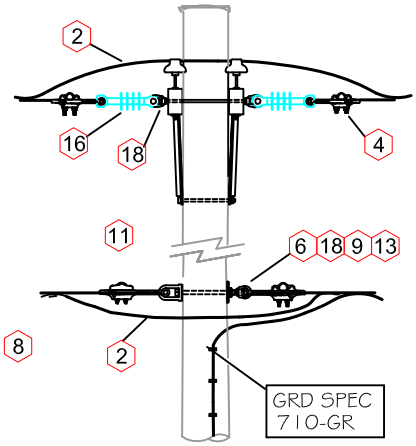

D5.1

(NOTE: USE +D5.1 FOR 25KV)

ITEM	DESCRIPTION	QNTY C5-33.41	STOCK #
1	PIN TYPE INSULATOR 15KV	12	4011500
+1	PIN TYPE INSULATOR 25KV	12	4012500
2	JUMPER (SEE 1200.CJ)	7	**AS REQ'D**
3	xxx CROSSARM PIN	12	4500100
4	DEADEND - BOLTED (SEE 1000.DE)	14	**AS-REQ'D**
5	xxx - BOLT MACH - 6 X 1/2	4	3020600
6	xxx - BOLT MACH - 12 X 5/8	1	3031200
7	xxx - BOLT MACH - 22 X 5/8	1	3032000
8	xxx CONNECTOR - AMPACT (SEE 1000.cn)	14	**AS REQ'D**
9	XXX - WASHER - sq-2 1/4	27	3292000
10	XXX - WASHER - ROUND GALV-1/2	4	3280800
11	XXX - D-EYE - 5/8	1	3990100
12	XXX - WASHER - DBL COIL LOCK - 1/2	4	3330800
13	XXX - WASHER - DBL COIL LOCK - 5/8	15	3330900
14	CROSSARM - 12'x3"x4"	2	1041200
15	V BRACE - 72"	2	1306100
16	SUSPENSION INSUL - 15KV POLY	12	4021500
+16	SUSPENSION INSUL - 25KV POLY	12	4022500
17	xxx - BOLT DA - 24 X 5/8	6	3082400
18	xxx - EYENUT - 5/8	13	3231000
19	xxx 4 SOL AL TIE WIRE	24FT	5430500

DATE: 08/20/04
REV: 11/14/2007
DRAWN: JK/DT
CHK: RA/DP
PG 1 OF 1
FILE: H:\ENGSTANDARDS\05 SPECBOOK\300-DIST_OH\330-3 PHS\C5-33.41

GROUP: PRIMARY - THREE PHASE - DOUBLE DEADEND
TYPE: DOUBLE CIRCUIT - LOWER NEUTRAL

OPTIONS:

D5.1

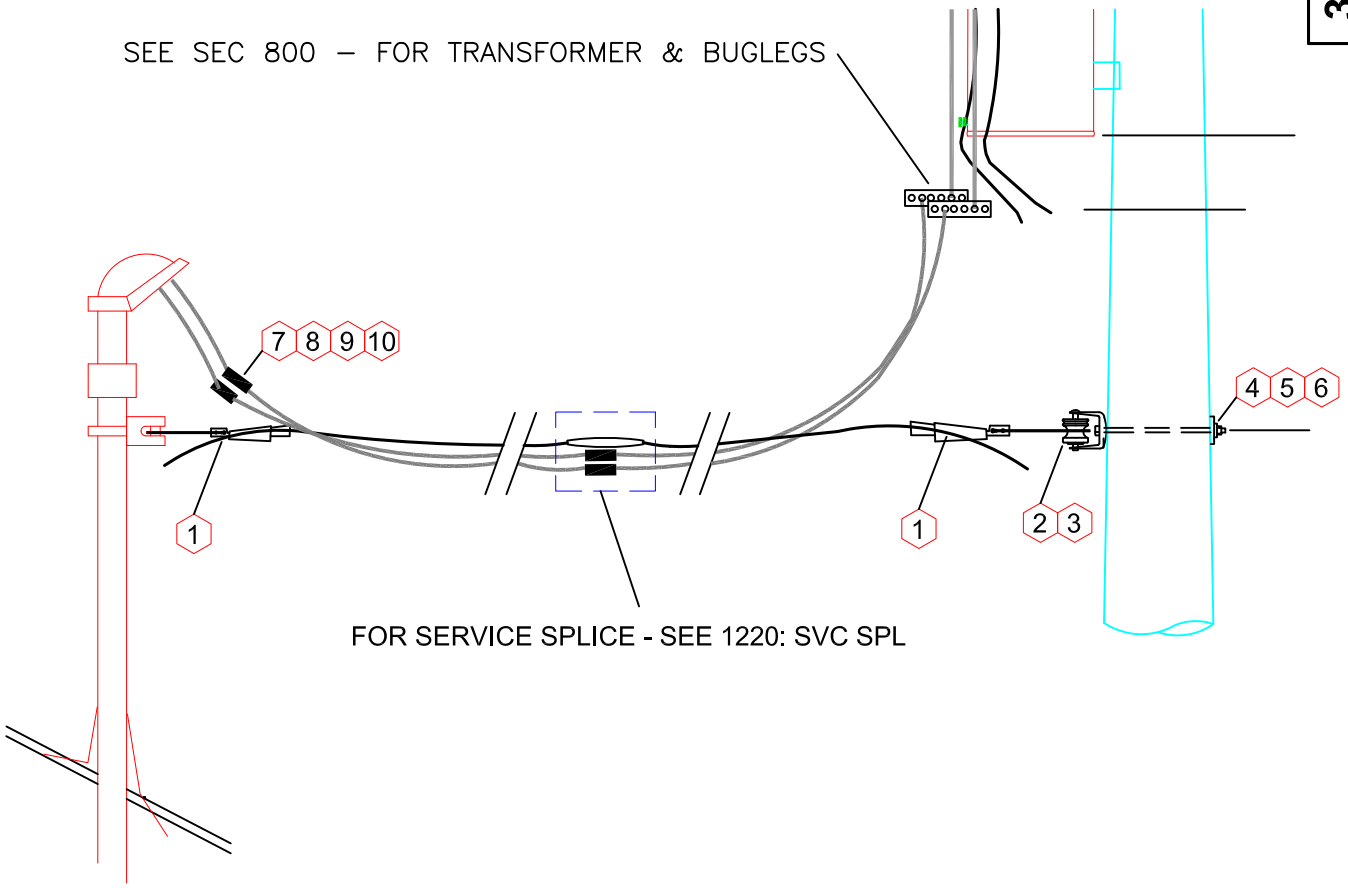

		SVC CONDUCTOR SIZE		
		#6 - #2	1/0 - 4/0	
ITEM	DESCRIPTION	SVC-1A	SVC-1B	STOCK #
1	xxx WEDGE CLAMP 6-2	1	0	6490000
+1	xxx WEDGE CLAMP 1/0-4/0	0	1	6490300
2	xxx SPOOL INSULATOR	1	1	4025000
3	xxx SPOOL INSULATOR CLEVIS	1	1	4025200
4	xxx BOLT MACH 12" x 5/8"	1	1	3031200
5	xxx SQ FLAT WASHER 2-1/4"	1	1	3292000
6	xxx DBL COIL 5/8" LOCK WASHER	1	1	3330900
7	xxx CONN. WR289 2/0STR-#2	1	0	6281700
8	xxx CONN. WR379 #4/0 - #6	2	1	6282800
9	xxx CONN. WR399 #4/0-#1/0	0	2	6283000
10	xxx MEDIUM H-TAP COVER	2	2	6394000

REF. OLD SPEC. SB334–500 DE SEC CLEVIS,
CA100–032 (034) SVC ASSY HOUSEKNOB SVC WEDGE

SEE MANUFACTURE SPECIFICATIONS FOR INSTALLATION INSTRUCTIONS
SEE 1200 - FOR MANUFACTURE SPECIFICATIONS

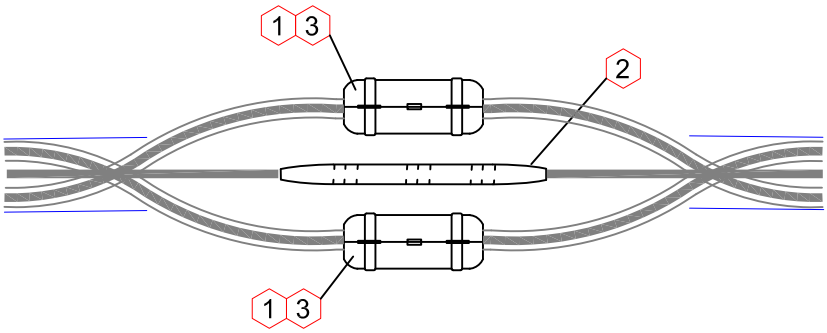

TRIPLEX (1/0 - 1/0 - #2) - SERVICE SPLICE - SVC SPL1
TRIPLEX (#2- #2 - #4) - SERVICE SPLICE - SVC SPL2
TRIPLEX (#4 - #4 - #4) - SERVICE SPLICE - SVC SPL4

		SVC CONDUCTOR SIZE			
		1/0-1/0-#2	#2-#2-#4	#4-#4-#4	
ITEM	**DESCRIPTION**	**SVC-SPL1**	**SVC-SPL2**	**SVC-SPL4**	**STOCK #**
1	xxx SERVICE SLEEVE 1/0-1/0	2	0	0	6033900
"	xxx SERVICE SLEEVE #2-#2	0	2	0	6032100
"	xxx SERV SLEEVE #4-#4	0	0	2	6030700
2	xxx NEUTRAL SLEEVE #2	1	0	0	6020700
"	xxx NEUTRAL SLEEVE #4	0	1	1	6020500
3	xxx SMALL H-TAP COVER	2	2	2	6393200

SPEC CODE: DK011-110

380

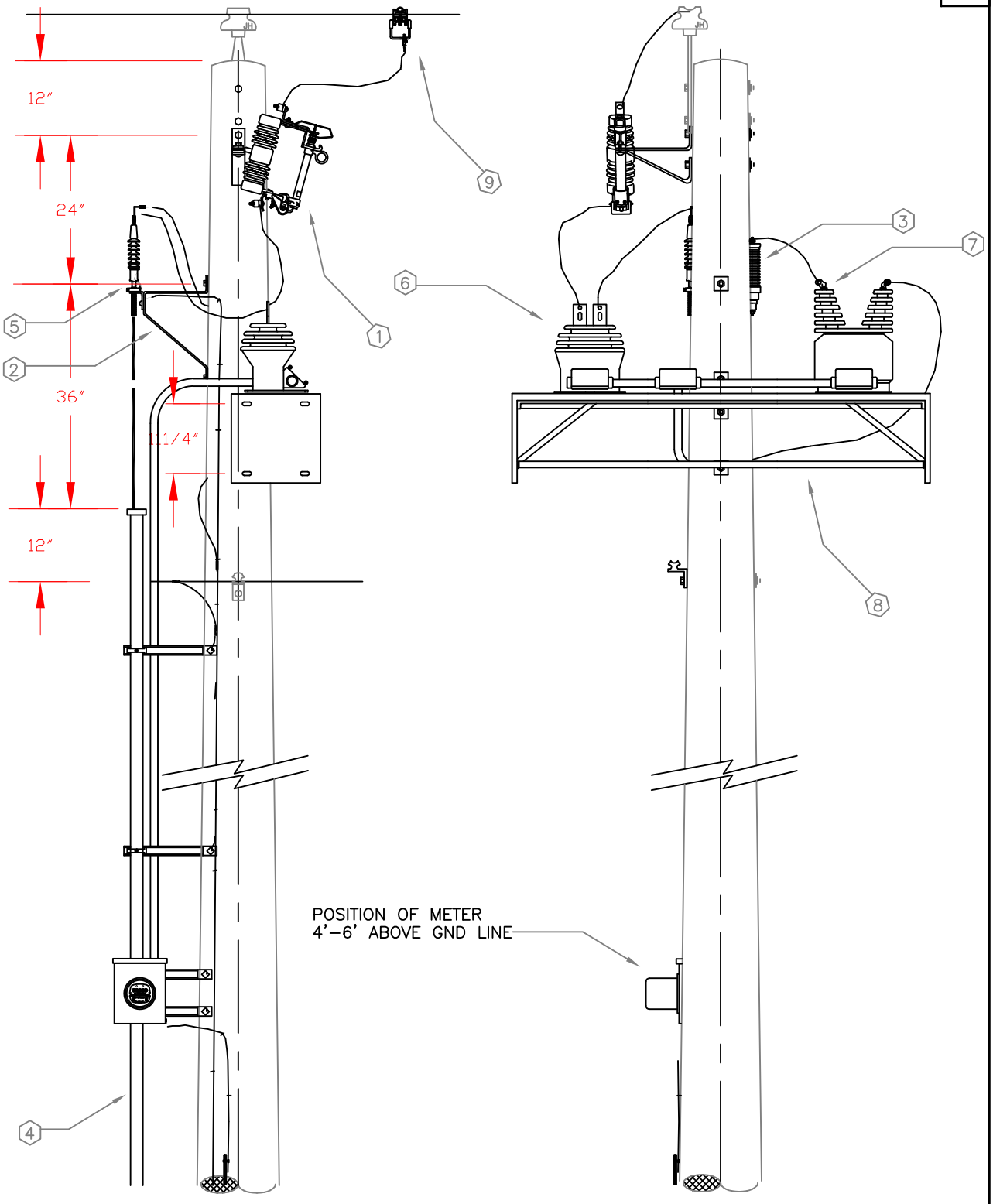

DATE: 08/20/04
REV: 6/11/2007
DRAWN: JK/DT
CHK: RA/DP
PG 1 OF 1
FILE: H:\ENGSTANDARDS\05 SPECBOOK\300\380-PRIMARY METER\

GROUP: OVERHEAD - PRIMARY METER - 1 PHASE
TYPE: THREE PHASE

OPTIONS:

PRIME-1

SPEC CODE: DK011-110

SPEC CODE	ITM. NO.	QTY.	DESCRIPTION	TYPE CODE SET CODES
D K011-110			1ø 12.5KV PRIMARY METERING – OVERHEAD TO UNDERGROUND TAP	METER PRI
	1	1	CUTOUT/JUMPER ASSY S&C 100A 15KV	DB651-224
	2	1	CUTOUT/ARRESTER BRACKET ALUMA-FORM SGL	DB600-005
	3	1	ARRESTER DIST 10KV	DB636-010
	4	1	CONDUIT RISER SGL STAND-OFF BKTS SCHEDULE 80 2"	DB711-223
			ADDITIONAL SET CODES	
	5	1	15KV TERMINATION #2	DJ121-000
	5	1	15KV TERMINATION 1/0	DJ122-000
	5	1	15KV TERMINATION 4/0	DJ123-000
	6	1	TRANSFORMER, CURRENT (OUTDOOR)	
	7	1	TRANSFORMER, POTENTIOL (OUTDOOR)	
	8	1	BRACKET PRIMARY METERING ALUMAFORM PMM4	
	9	1	CLAMP STIRRUP 4-4/0	DSTIR44/0
	9	1	CLAMP STIRRUP 4/0 – 397.5	DSTIR4/039
	9	1	CLAMP STIRRUP 556.5 AAC	DSTIR556

SPEC CODE: DK031-110

380

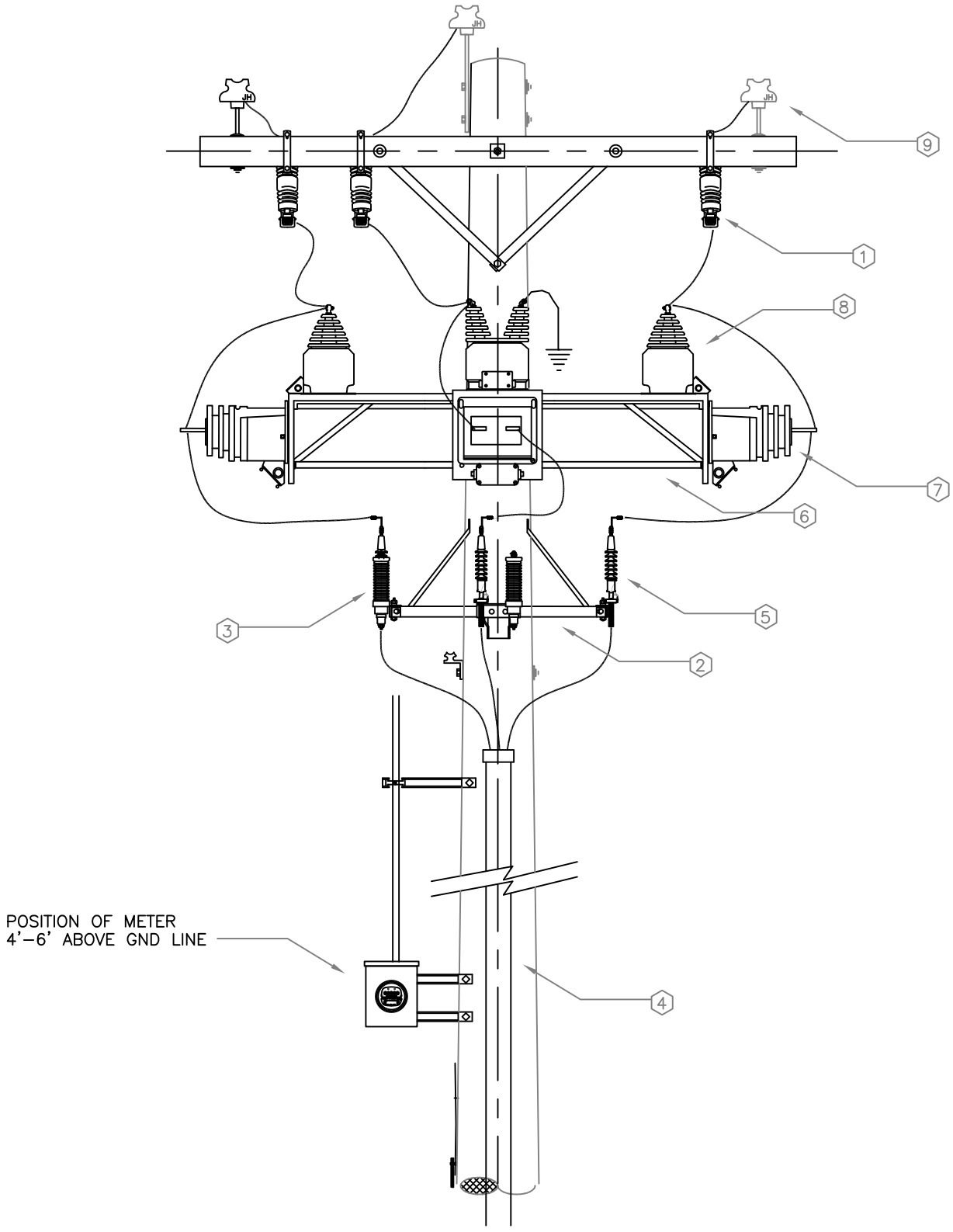

DATE: 08/20/04
REV: 6/11/2007
DRAWN: JK/DT
CHK: RA/DP
PG 1
OF 1
FILE: H:\ENGSTANDARDS\05 SPECBOOK\300\380-PRIMARY METER\

GROUP: OVERHEAD - PRIMARY METER - 3 PHASE
TYPE: THREE PHASE

OPTIONS:

PRIME-3

SPEC CODE: DK031-110

SPEC CODE	ITM. NO.	QTY.	DESCRIPTION	TYPE CODE SET CODES
D K031-110			3ø 12.5KV PRIMARY METERING – OVERHEAD TO UNDERGROUND TAP	METER PRI
	1	3	CUTOUT/JUMPER ASSY S&C 100A 15KV	DB651-220
	2	1	CUTOUT/ARRESTER BRACKET ALUMAFORM 3 WAY	DB600-006
	3	3	ARRESTER DIST 10KV	DB636-010
	4	1	CONDUIT RISER SGL STAND-OFF BKTS 4"	DB711-227
			ADDITIONAL SET CODES	
	5	3	15KV TERMINATION #2	DJ121-000
	5	3	15KV TERMINATION 1/0	DJ122-000
	5	3	15KV TERMINATION 4/0	DJ123-000
	6	1	BRACKET PRIMARY METERING ALUMAFORM PMM6	
	7	3	TRANSFORMER, CURRENT (OUTDOOR)	
	8	3	TRANSFORMER, POTENTIAL (OUTDOOR)	
	9	3	CLAMP STIRRUP 4-4/0	DSTIR44/0
	9	3	CLAMP STIRRUP 4/0-397.5	DSTIR4/039
	9	3	CLAMP STIRRUP 556.5 AAC	DSTIR556

UNDERGROUND DISTRIBUTION

400

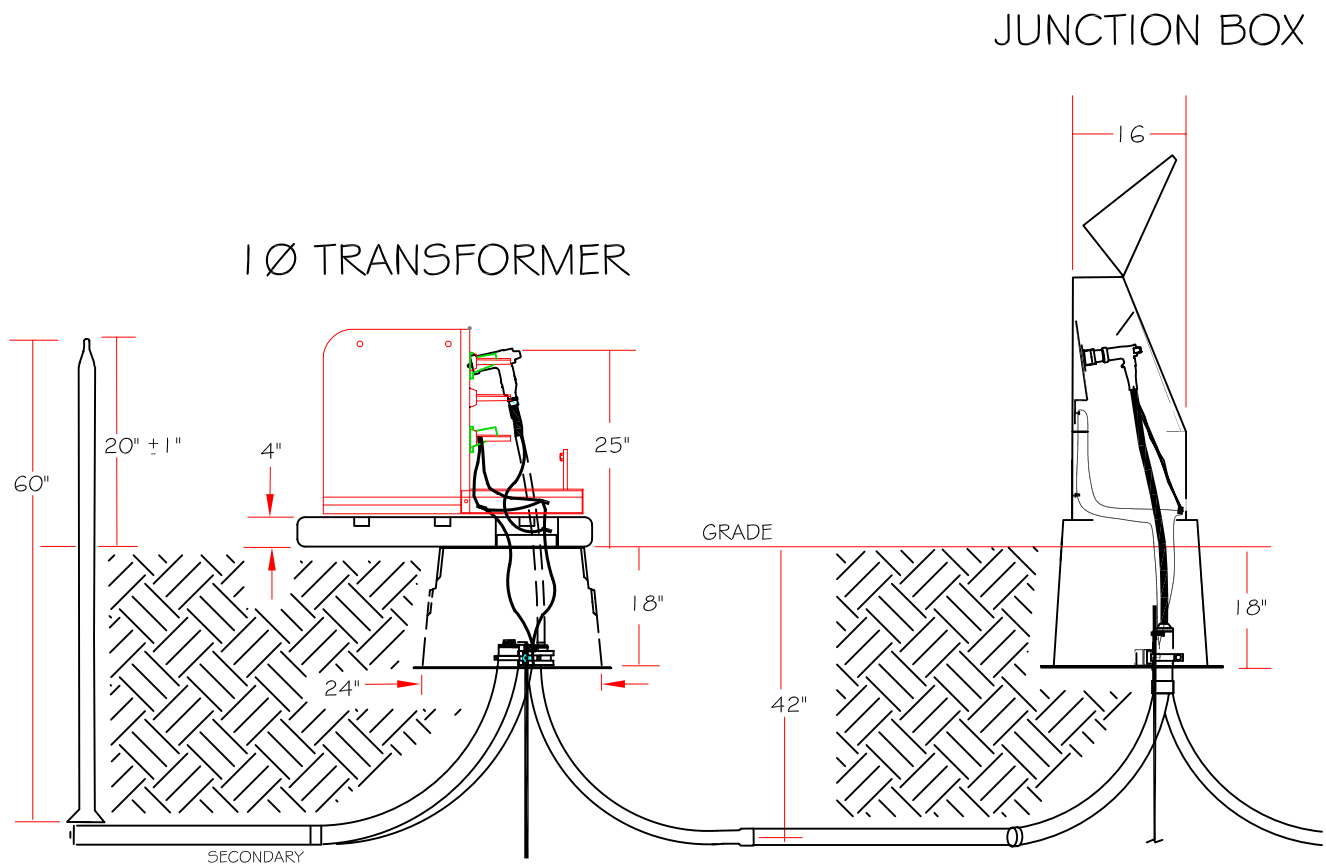

410 - Hill holders, Underground Misc.
420 - Padmount Transformers
430 - Junction Boxes (Padmount & Vaults)
440 - Switchgear Cabinets
450 - Fuse Cabinets
460 - Vault Miscellaneous
470 - Elbow, Feedthru, and Termination
480 - Conduit Sweeps and Fittings
490 - Underground Secondary

DATE: 08/20/04	PD #1 of Clallam County	**GROUP:** Underground Distribution
REV: 5/22/2007		
DRAWN: JK/DT	PG 1 OF 2	OPTIONS:
CHK: RA/DP		400
FILE: H:\ENGSTANDARDS\05 SPECBOOK\400-DISTR_UG\		

420 - PADMOUNT TRANSFORMERS:

SINGLE PHASE	ASSEMBLY/DWG
PEDESTAL & SCOOP	
• 1Ø - PVC LID W/ SCOOP - RADIAL	PS1-R
• 1Ø - PVC LID W/ SCOOP - FEED THRU	PS1-F
• 1Ø - PVC LID W/ SCOOP - LOOP	PS1-L
TRANSFORMER PEDESTAL & SCOOP	
• 1Ø - PAD & SCOOP, 1/O ELBOW - RADIAL	PT1-R
• 1Ø - PAD & SCOOP, 1/O ELBOW - FEED THRU	PT1-F
• 1Ø - PAD & SCOOP, 1/O ELBOW - LOOP	PT1-L

THREE PHASE - 75-300KVA	ASSEMBLY/DWG
PADMOUNT TRANSFORMER VAULT	
• 3Ø - VAULT & LID, 1/O ELBOW - LOOP FEED	PT3V-1L
• 3Ø - VAULT & LID, 1/O ELBOW - RADIAL FEED	PT3V-1R

THREE PHASE - 500-2500KVA	ASSEMBLY/DWG
PADMOUNT TRANSFORMER VAULT	
• 3Ø - VAULT & LID, 1/O ELBOW - LOOP FEED	PT3V-2L
• 3Ø - VAULT & LID, 1/O ELBOW - RADIAL FEED	PT3V-2R

430 - JUNCTION BOXES (PADMOUNT & VAULTS):

JUNCTION PADMOUNT - 200AMP	ASSEMBLY/DWG
• 1Ø - J-BOX, 4-WAY , 1/0 Elbows and Sweeps to 2" PVC, Loop Feed	JP1
• 1Ø - J-BOX, 5-WAY, 1/0 Elbows and Sweeps to 2" PVC, Loop Feed	JP1-5
• 2Ø - J-BOX,	JP2
• 2Ø - J-BOX , 1/0 Elbows and Sweeps to 2" PVC, Loop Feed	JP2-1
• 2Ø - J-BOX , 1/0 Elbows and Sweeps to 2" CIC, Loop Feed	JP2-2
• 3Ø - J-BOX,	JP3
• 3Ø - J-BOX , 1/0 Elbows and Sweeps to 2" PVC, Loop Feed	JP3-1
• 3Ø - J-BOX , 1/0 Elbows and Sweeps to 2" CIC, Loop Feed	JP3-2
• 3Ø - J-BOX , 4/0 Elbows and Sweeps to 3" CIC, Loop Feed	JP3-3

JUNCTION VAULT - 200AMP	ASSEMBLY/DWG
• 1Ø - VAULT JUNCTION BOX	JV1-200
• 3Ø - VAULT JUNCTION BOX	JV3-200

JUNCTION VAULT - 600AMP	ASSEMBLY/DWG
• 3Ø - VAULT JUNCTION BOX - 600AMP	JV3-600

SPLICE VAULT -	ASSEMBLY/DWG
• 84" x 56" x 60" VAULT AND RACKING FOR UG SPLICE	SPV

* TO OBTAIN MATERIAL PRINTOUTS FOR 25KV, INCLUDE A PLUS (+) SIGN BEFORE THE 15KV ASSEMBLY SPECIFICATION NUMBER

440 - SWITCHGEAR CABINET & VAULTS:

SWITCHGEAR CABINET - 600AMP	ASSEMBLY/DWG
• PSI/II - 9, LIVE FRONT CABINET (2-FUSED POSITIONS)	SGC-9
• PSI/II - 10, LIVE FRONT CABINET (0-FUSED POSITIONS)	SGC-10
• PSI/II - 11, LIVE FRONT CABINET (1-FUSED POSITIONS)	SGC-11
• PSI/II - 12, LIVE FRONT CABINET, (3-FUSED POSITIONS)	SGC-12

SWITCHGEAR VAULT - 600AMP	ASSEMBLY/DWG
• SWITCHGEAR VAULT, 600AMP	SGV-600

450 - FUSE CABINETS PADMOUNT & VAULTS:

SINGLE PHASE -	ASSEMBLY/DWG
PADMOUNT - 65A	
• 1Ø -FUSE PADMOUNT, 8KV, 65A - LOOP FEED	FP1-L
• 1Ø - FUSE PADMOUNT, 8KV, 65A - RADIAL FEED	FP1-R
CABINET & VAULT - 200A	
• 1Ø - FUSE CABINET - LOOP FEED	FC1-200L
• 1Ø - FUSE CABINET - RADIAL	FC1-200R
• 1Ø - FUSE VAULT	FV1-200

THREE PHASE -	ASSEMBLY/DWG
CABINET & VAULT - 200A	
• 3Ø - FUSE CABINET - LOOP	FC3-200L
• 3Ø - FUSE CABINET - RADIAL	FC3-200R
• 3Ø - FUSE VAULT	FV3-200

460 - VAULT MISCELLANEOUS:

VAULT MISCELLANEOUS - SUB ASSEMBLY	ASSEMBLY/DWG
• VAULT STOCK - SIZES AND APPLICATION	UVM-1
• STANCHIONS AND CABLE RACKS	UVM-2
• CONDUIT ENDS & FOAM SEALANT	UVM-3
• VAULT ASSEMBLY DETAILS	UVM-4

470 - ELBOW, FEEDTHRU AND TERMINATION:

FEEDTHRU & ELBOWS 200AMP (15KV-25KV)	ASSEMBLY/DWG
• ELBOW 200AMP (15VK-25KV)	470 EL 200
• FEEDTHRU 200AMP (15VK-25KV)	470 FT 200

FEEDTHRU & ELBOWS 600AMP (15KV-25KV)	ASSEMBLY/DWG
• FEEDTHRU EXTENSION & ELBOW KIT	470 FT 600
• FEEDTHRU TERMINATION OPTIONS	470 FT 600B

TERMINATION - UNDERGROUND VAULT (200AMP-600AMP)	ASSEMBLY/DWG
• TERMINATION VAULT ASSEMBLY	TMV-SET

* TO OBTAIN MATERIAL PRINTOUTS FOR 25KV, INCLUDE A PLUS (+) SIGN BEFORE THE 15KV ASSEMBLY SPECIFICATION NUMBER

480 - CONDUIT, SWEEPS & FITTINGS (csf):

CONDUIT, SWEEPS, AND FITTINGS	ASSEMBLY/DWG
• CONDUIT AND SWEEPS	CSF-1
• CONDUIT FITTINGS (muli-caps, reducers, bell ends)	CSF-2
• SWEEP ASSEMBLIES	CSF-3

490 - UNDERGROUND SECONDARY:

SECONDARY PEDESTAL	ASSEMBLY/DWG
• JUNCTION-SECONDARY PEDESTAL	JSP

SECONDARY TERMINATION CABINETS - 3Ø	ASSEMBLY/DWG
• JUNCTION-SECONDARY PEDESTAL 3Ø (14 CONNECTION)	JSP3-14
• JUNCTION-SECONDARY PEDESTAL 3Ø (20 CONNECTION)	JSP3-20
• JUNCTION-SECONDARY PEDESTAL 3Ø (30 CONNECTION)	JSP3-30

* TO OBTAIN MATERIAL PRINTOUTS FOR 25KV, INCLUDE A PLUS (+) SIGN BEFORE THE 15KV ASSEMBLY SPECIFICATION NUMBER

HILL HOLDER

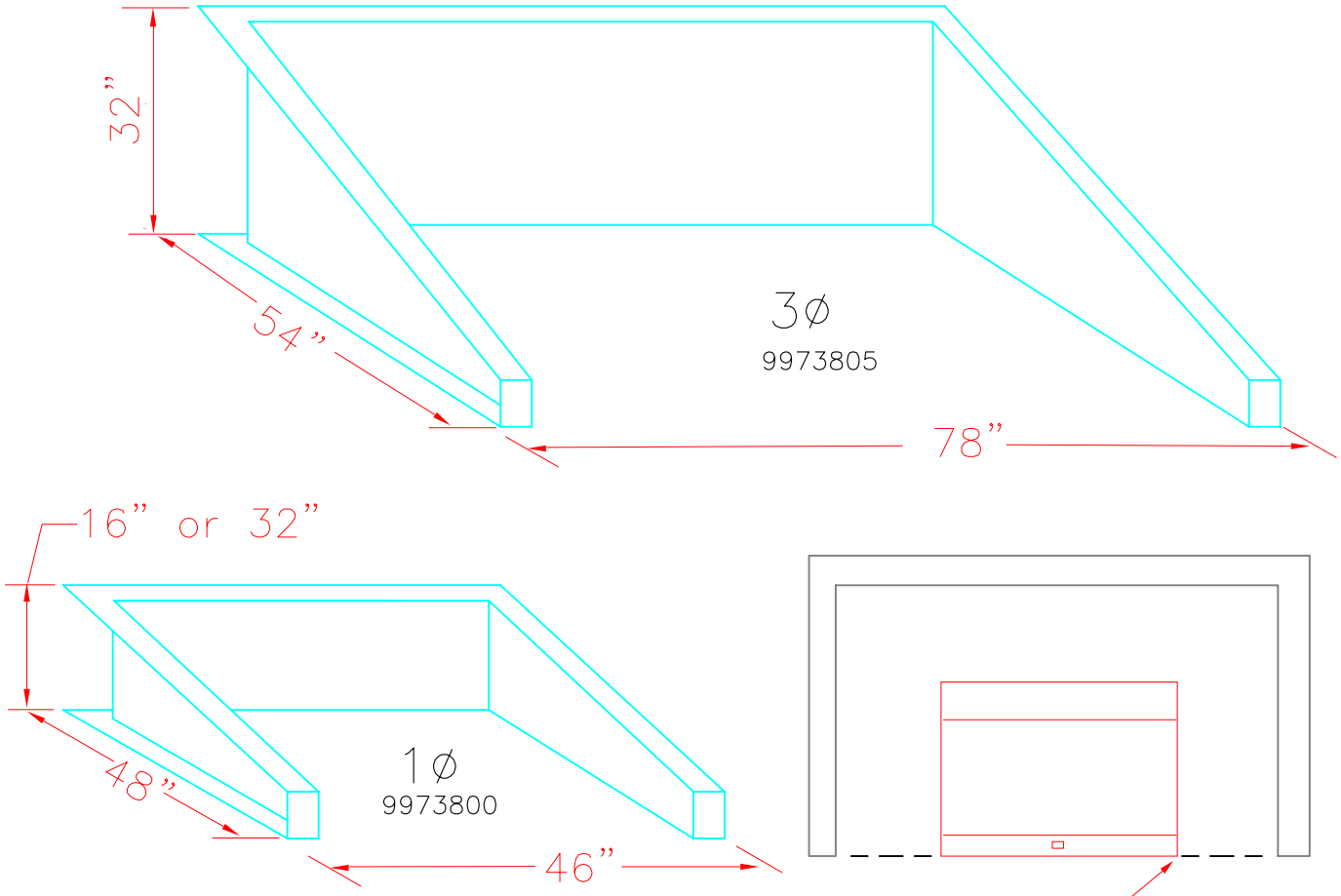

ITEM	DESCRIPTION	QNTY		STOCK #
		DJHILLHLDR	DJHILLHLDR3	
1	HILL HOLDER 16&32H x 46W x 48L	1	0	9973800
1	HILL HOLDER 32H x 78W x 54L	0	1	9973805

DATE: 10/20/06
REV: 5/23/2007
DRAWN: JK/DT
CHK: RA/DP
FILE: H:\ENGSTANDARDS\05 SPECBOOK\400\410\HILL HOLDER

PD #1 of Gladwin County

PG 1 OF 1

GROUP: DISTRIBUTION UNDERGROUND
DETAIL: UNDERGROUND MISC. - HILL HOLDER

OPTIONS: 16" OR 32"

DJHILLHLDR

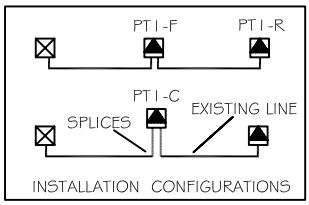

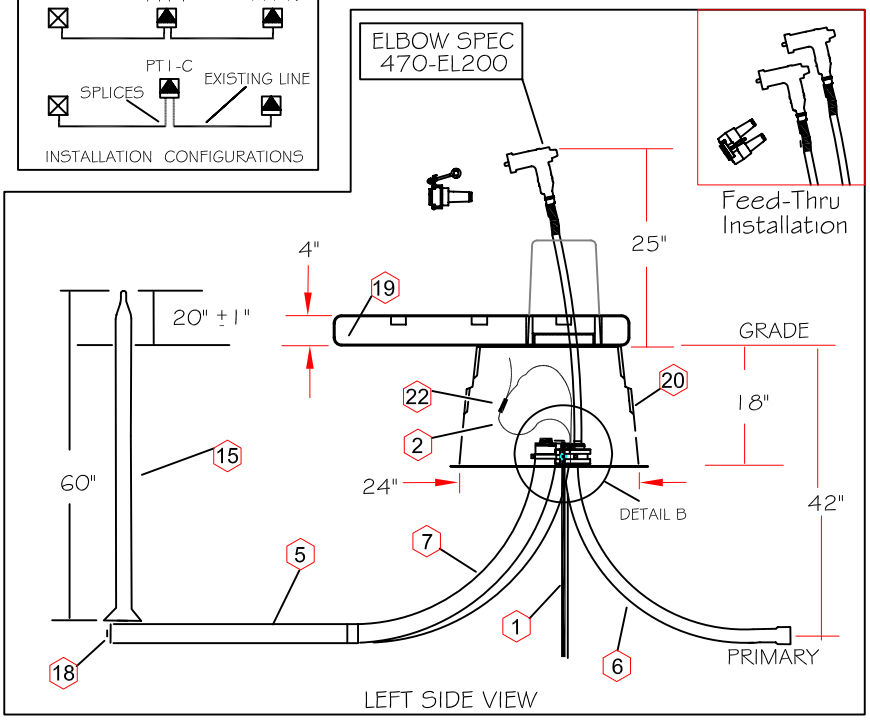

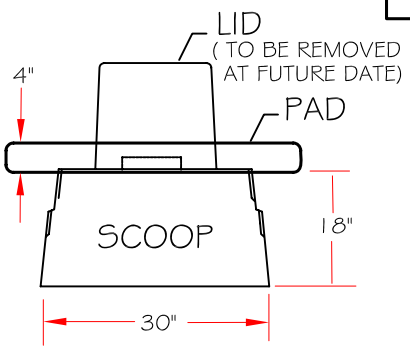

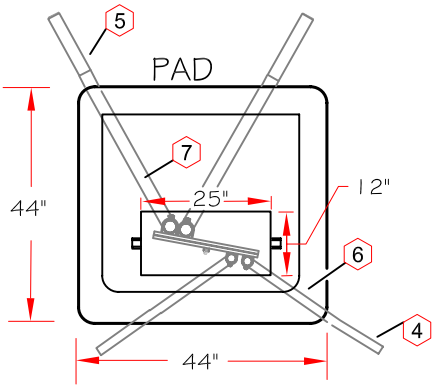

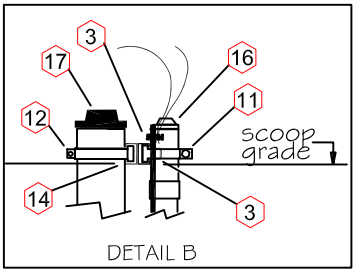

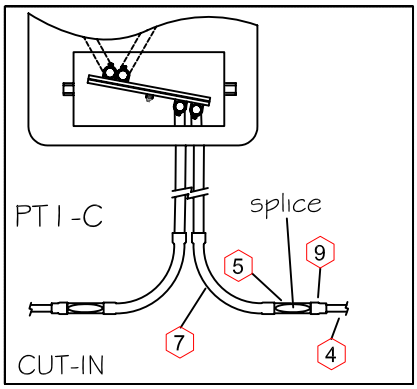

ITEM	DESCRIPTION	PS1- R	PS1- F	PS1- C	STOCK #
1	xxx - GROUND ROD 8' x 5/8" CU	1	1	1	3420800
2	xxx - 2 CU SD 7-STRAND	12'	12'	12'	5080700
3	xxx - GROUND ROD CLAMP 5/8 BRNZ	1	1	1	6663900
4	CONDUIT 2" - SCH 40 PVC - 10'	10FT	10FT	10FT	8030800
5	CONDUIT 3" - SCH 40 PVC - 10'	10FT	10FT	10FT	8031200
6	xxx SWEEP 2" PVC 90deg	1	2	0	8132800
7	xxx SWEEP 3" PVC 90deg	2	2	4	8133500
8	XXX ADAPTER MALE 2"-PVC	1	2	0	8303200
9	ELBOW LB 1/0 AL 15KV	1	2	2	9300500
+9	ELBOW LB 1/0 AL 25KV	1	2	2	9301500
10	xxx CRIMP 2-2	2	3	3	6060700
11	xxx - CINCH CLAMP - 2" TWO PIECE	1	2	0	8955520
12	xxx - CINCH CLAMP - 3" TWO PIECE	2	2	4	8955730
13	xxx - CLAMP 5/8 GRND ROD CINCH	1	1	1	8995000
14	xxx - UNI-STRUT 24 GALV	1	1	1	8995500
15	xxx RED CONDUIT MARKER	2	2	2	9059700
16	xxx - MULTI CAP 2"	1	2	0	9060200
17	xxx - MULTI CAP 3"	2	2	4	9060300
18	xxx RED CAP - 3"	2	2	2	9060400
19	TRANSFORMER PAD - PVC	1	1	1	9974000
20	TRANSFORMER SCOOP - PVC	1	1	1	9974100

DATE: 08/20/04
REV: 5/22/2007
DRAWN: JK/DT
CHK: RA/DP
PG 1 OF 1
FILE: H:\ENGSTANDARDS\05 SPECBOOK\400-DISTR_UG\420-TRSF'S\PS1-UG

GROUP: PADMOUNT SLAB & SCOOP

OPTIONS:		
	PAD & SCOOP - Radial Installation	**PS1-R**
	PAD & SCOOP - Feed Thru Installation	**PS1-F**
	PAD & SCOOP - Cut-In Installation	**PS1-C**

420

SPECIFICATIONS FOR 1/0 INSTALLATION

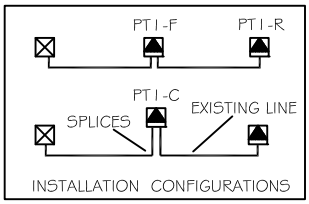

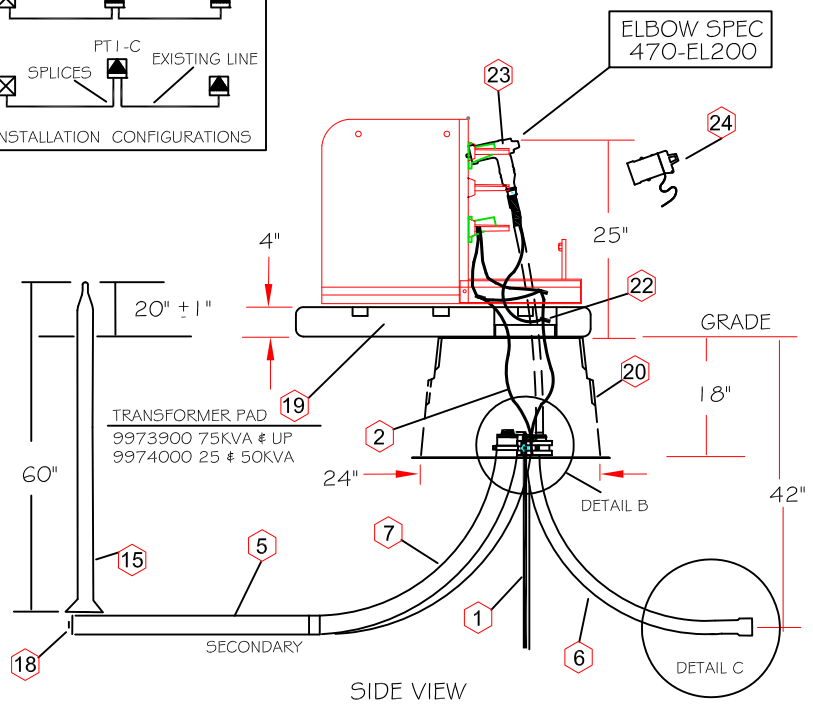

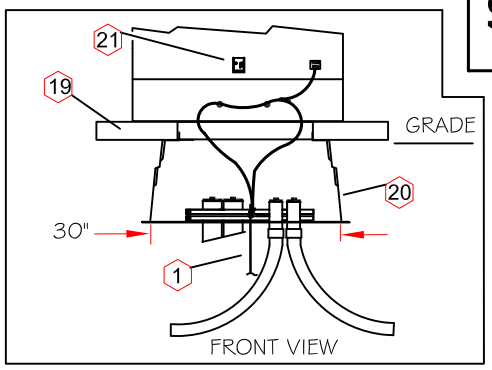

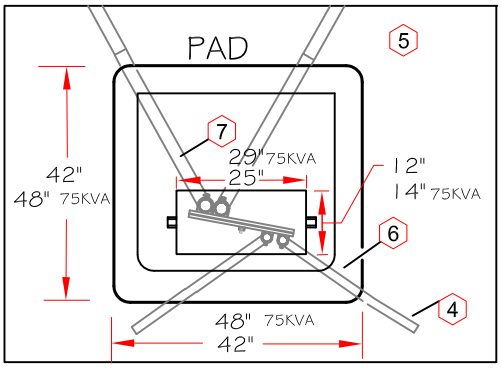

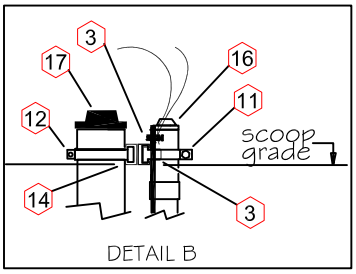

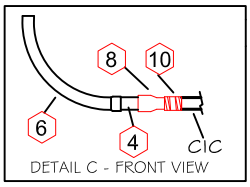

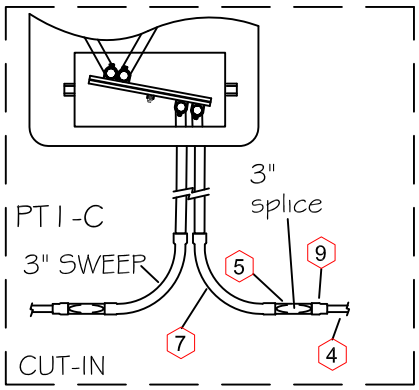

ITEM	DESCRIPTION	PT1- R	PT1- F	PT1- C	STOCK #
1	xxx - GROUND ROD 8' x 5/8" CU	1	1	1	3420800
2	xxx - 2 CU SD 7-STRAND	12'	12'	12'	5080700
3	xxx - GROUND ROD CLAMP 5/8 BRNZ	1	1	1	6663900
4	CONDUIT 2" - SCH 40 PVC - 10'	1	1	0	8030800
5	CONDUIT 3" - SCH 40 PVC - 10'	1	1	2	8031200
6	xxx SWEEP 2" PVC 90deg	1	2	0	8132800
7	xxx SWEEP 3" PVC 90deg	2	2	4	8133500
8	xxx ADAPTER MALE 2"-PVC	1	2	0	8303200
9	xxx REDUCER 3" TO 2" PVC	0	0	2	8308000
10	xxx COUPLING - 2" PVC - CIC AL	1	2	0	8382000
11	xxx CLAMP 2 PIECE 2" STANDOFF	1	2	0	8955520
12	xxx CLAMP 2 PIECE 3" STANDOFF	2	2	4	8955730
13	xxx - CLAMP 5/8 GRND ROD CINCH	1	1	1	8995000
14	xxx - UNI-STRUT 24 GALV	1	1	1	8995500
15	xxx RED CONDUIT MARKER	2	2	2	9059700
16	xxx - MULTI CAP 2"	1	2	0	9060200
17	xxx - MULTI CAP 3"	2	2	4	9060300
18	xxx RED CAP - 3"	2	2	2	9060400
19	TRANSFORMER PAD - PVC	1	1	1	9974000
20	TRANSFORMER SCOOP - PVC	1	1	1	9974100
21	xxx TRANSFORMER LOCK	1	1	1	9979900
22	xxx CONNECTOR -CRIMPET 2-2	2	3	3	6060700
23	ELBOW LB 1/0 AL 15KV	1	2	2	9300500
+23	ELBOW LB 1/0 AL 25KV	1	2	2	9301500
24	xxx GRND PROTECT CAP 15KV	1	0	0	9410500
+24	xxx GRND PROTECT CAP 25KV	1	0	0	9410600

DATE: 08/20/04
REV: 5/22/2007
DRAWN: JK/DT
CHK: RA/DP
PD #1 of Gladwin County
PG 1 OF 2
FILE: H:\ENGSTANDARDS\05 SPECBOOK\400-DISTR_UG\420-TRSF'S\PT1-UG

GROUP: TRANSFORMER PAD, 1-PHASE

OPTIONS:		
	1/0 - Radial Installation	**PT1-R**
	1/0 - Feed Thru Installation	**PT1-F**
	1/0 - Cut-In Installation	**PT1-C**

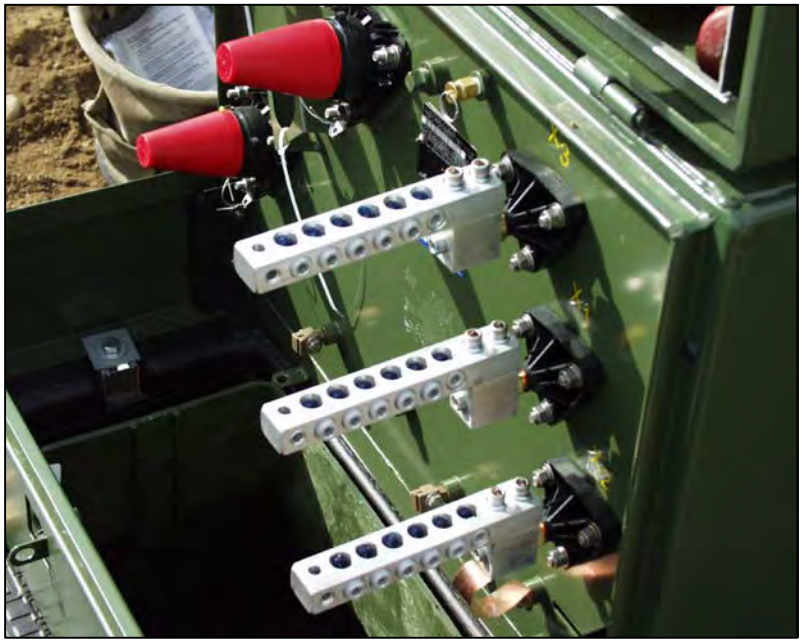

SECONDARY LUGS

ELBOW AND LABELING

GROUP: TRANSFORMER PAD, 1-PHASE

OPTIONS:	1/0 - Radial Installation	**PT1-R**
	1/0 - Feed Thru Installation	**PT1-F**
	1/0 - Cut-In Installation	**PT1-C**

SEE PAGE 2 FOR GROUNDING DETAILS

TRANSFORMER VAULT

THREE PHASE - (75-300KVA)

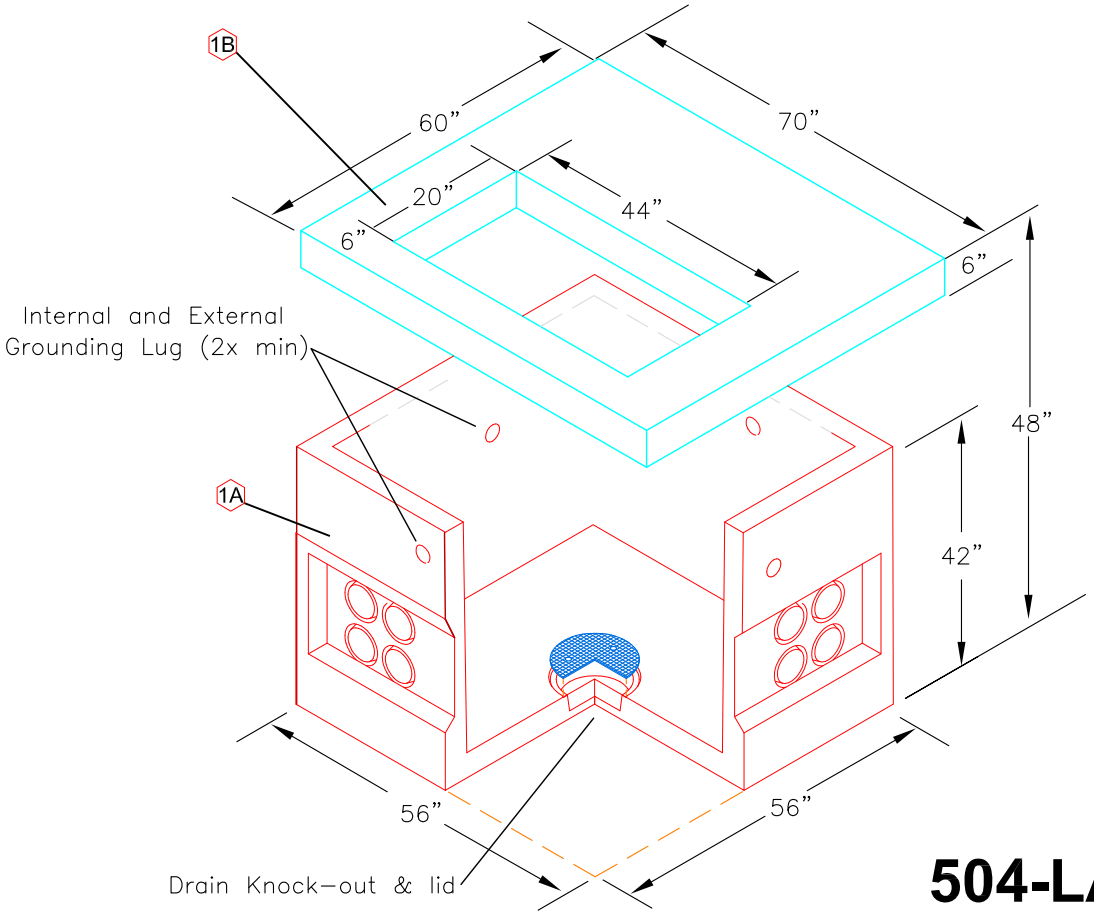

504-LA

ITEM	DESCRIPTION	75-300KVA		STOCK #
		PT3V-1L	PT3V-1R	
1A	VAULT 56"x 56"x42" W/O COVER	1	1	9975400
1B	COVER 70"x 60"x 6"	1	1	9975401

DATE: 08/20/04
REV: 5/22/2007
DRAWN: JK/DT
CHK: RA/DP
FILE: H:\ENGSTANDARDS\05 SPECB\400-DIST\430 TRSF\PT3V-1

PD#1 of Gladwin County

PG 1 OF 2

GROUP: PADMOUNT TRANSFORMER-VAULT
TYPE: THREE PHASE - (75-300KVA)

DIMENSIONS: COVER - 70" x 60" x 6"
VAULT - 56" x 56" x 42"

PT3V-1

SEE PAGE 1 FOR VAULT DIMENSIONS

THREE PHASE - (75-300KVA)

SEE 820 FOR TRANSFORMER DESIGNATION AND SPECIFICATIONS

420

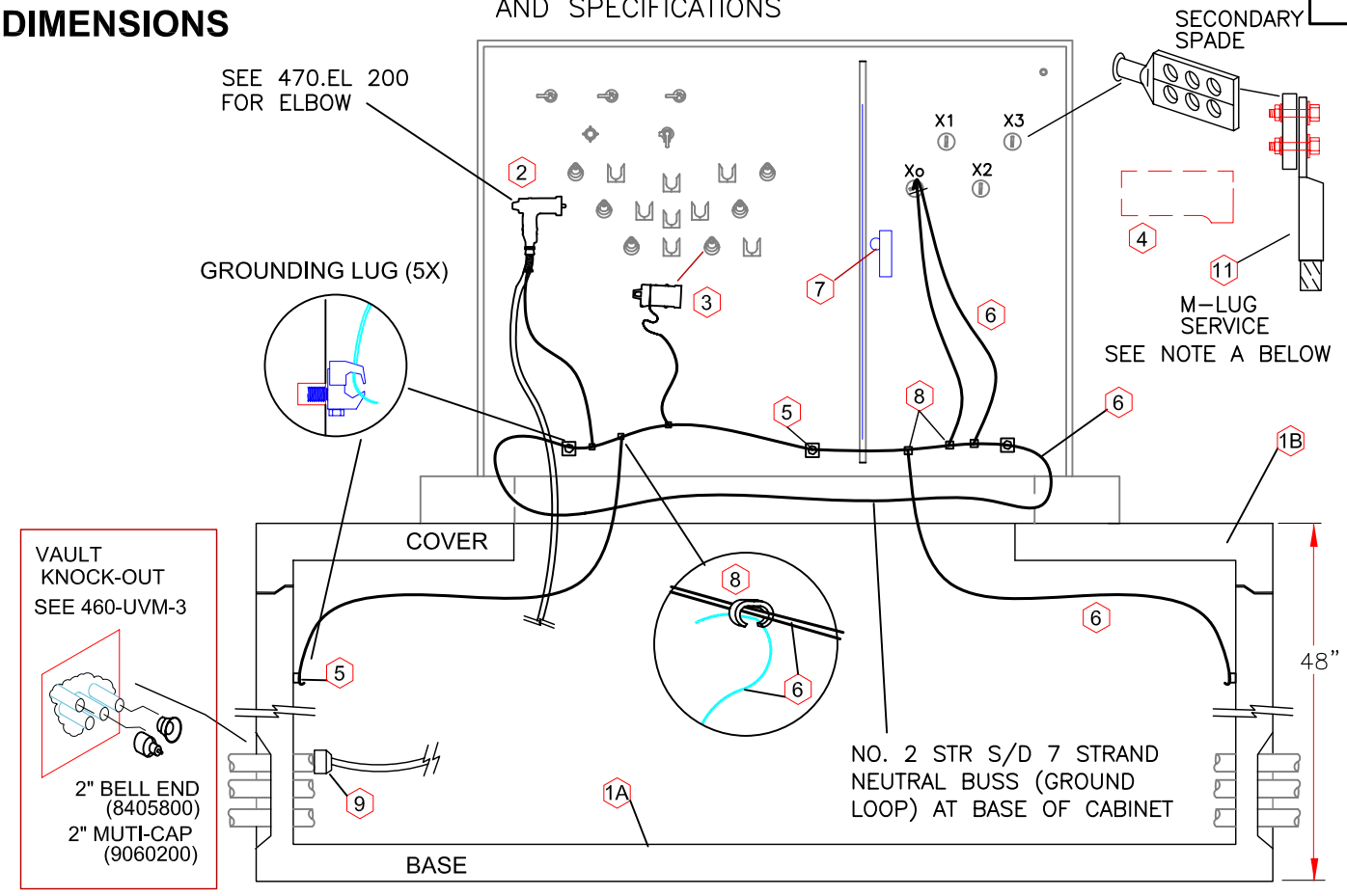

ITEM	DESCRIPTION	75-300KVA		STOCK #
		PT3V-1L	PT3V-1R	
1A	VAULT 56"x56"x42" w/o cover	1	1	9975400
1B	COVER 70"x60"x6" 3ph TSF	1	1	9975401
2	ELBOW LB 1/0 AL 15KV	6	3	9300500
+2	ELBOW LB 1/0 AL 25KV	6	3	9301500
3	xxx GRD. PROTECTIVE CAP 15KV	0	3	9410500
+3	xxx GRD. PROTECTIVE CAP 25KV	0	3	9410600
4	xxx MULTI-LUG COVER PM TSF 6-HOLE	3	3	6600810
5	xxx GROUNDING CONNECTOR	3	3	6589900
6	xxx NO. 2 STR SID 7 STRAND	24FT	24FT	5080700
7	xxx TRANSFORMER LOCK	1	1	9979900
8	xxx CRIMPIT 2-2	8	8	6060700
9	xxx MULTI-CAP 2"	6	3	9060200
10	**PADMOUNT TRANSFORMER (SEE 820.TR)**	1	1	AS REQ'D
11	**xxx M-LUG (SERVICE)**	4	4	AS REQ'D

NOTE A. FOR CONDUCTORS LARGER THAN 350 MCM ELECTRICAL CONTRACTOR WILL SUPPLY SECONDARY CONNECTIONS & BOLTING HARDWARE TO BE INSTALLED BY DISTRICT PERSONNEL. SEE ELECTRICAL SERVICE REQUIREMENTS FOR DETAILS.

DATE: 08/20/04
REV: 5/22/2007
DRAWN: JK/DT
CHK: RA/DP
PG 2 OF 2
FILE: H:\ENGSTANDARDS\05 SPECB\400-DIST\430 TRSF\PT3V-1

GROUP: PADMOUNT TRANSFORMER - VAULT
TYPE: THREE PHASE - (75-300KVA)

1/O ELBOW, (RADIAL OR LOOP FEED) INSTALLATION

PT3V-1

SEE PAGE 2 FOR GROUNDING DETAILS

TRANSFORMER VAULT

THREE PHASE - (500-2500KVA)

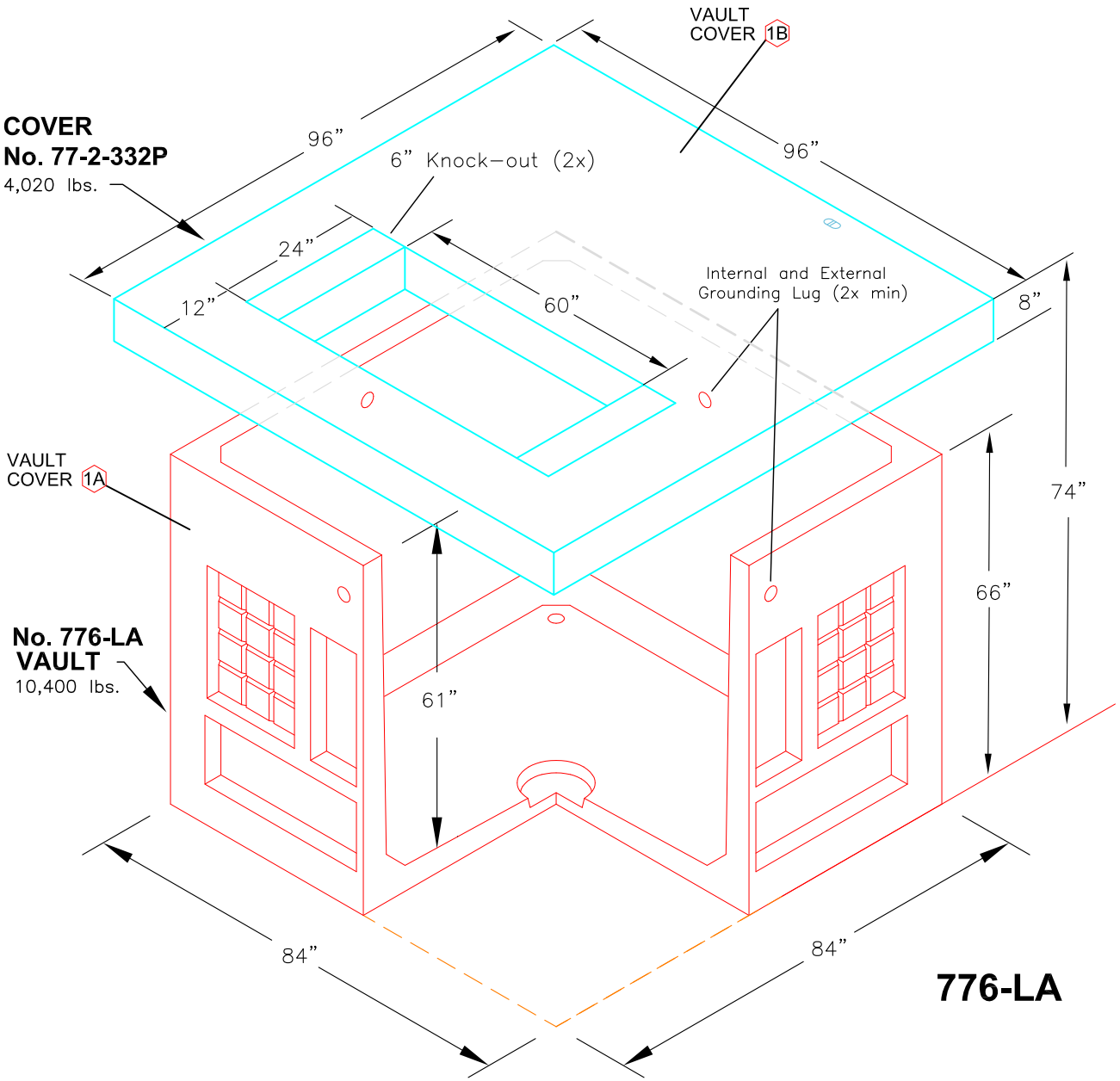

776-LA

ITEM	DESCRIPTION	500-2500KVA		STOCK #
		PT3V-2L	PT3V-2R	
1A	VAULT 84" x 84" x 66"	1	1	9975600
1B	COVER 96" x 96" x 8"	1	1	9975601

DATE: 08/20/04
REV: 5/22/2007
DRAWN: JK/DT
CHK: RA/DP
PG 1 OF 2
FILE: H:\ENGSTANDARDS\05 SPECB\400-DIST\430 TRSF\PT3V-2

GROUP: PADMOUNT TRANSFORMER-VAULT
TYPE: THREE PHASE - (500-2500KVA)

DIMENSIONS: LID - 96" x 96" x 8"
VAULT 84" x 84" x 42"

PT3V-2

SEE PAGE 1 FOR VAULT DIMENSIONS

THREE PHASE - (500-2500KVA)

SEE 820 FOR TRANSFORMER DESIGNATION AND SPECIFICATIONS

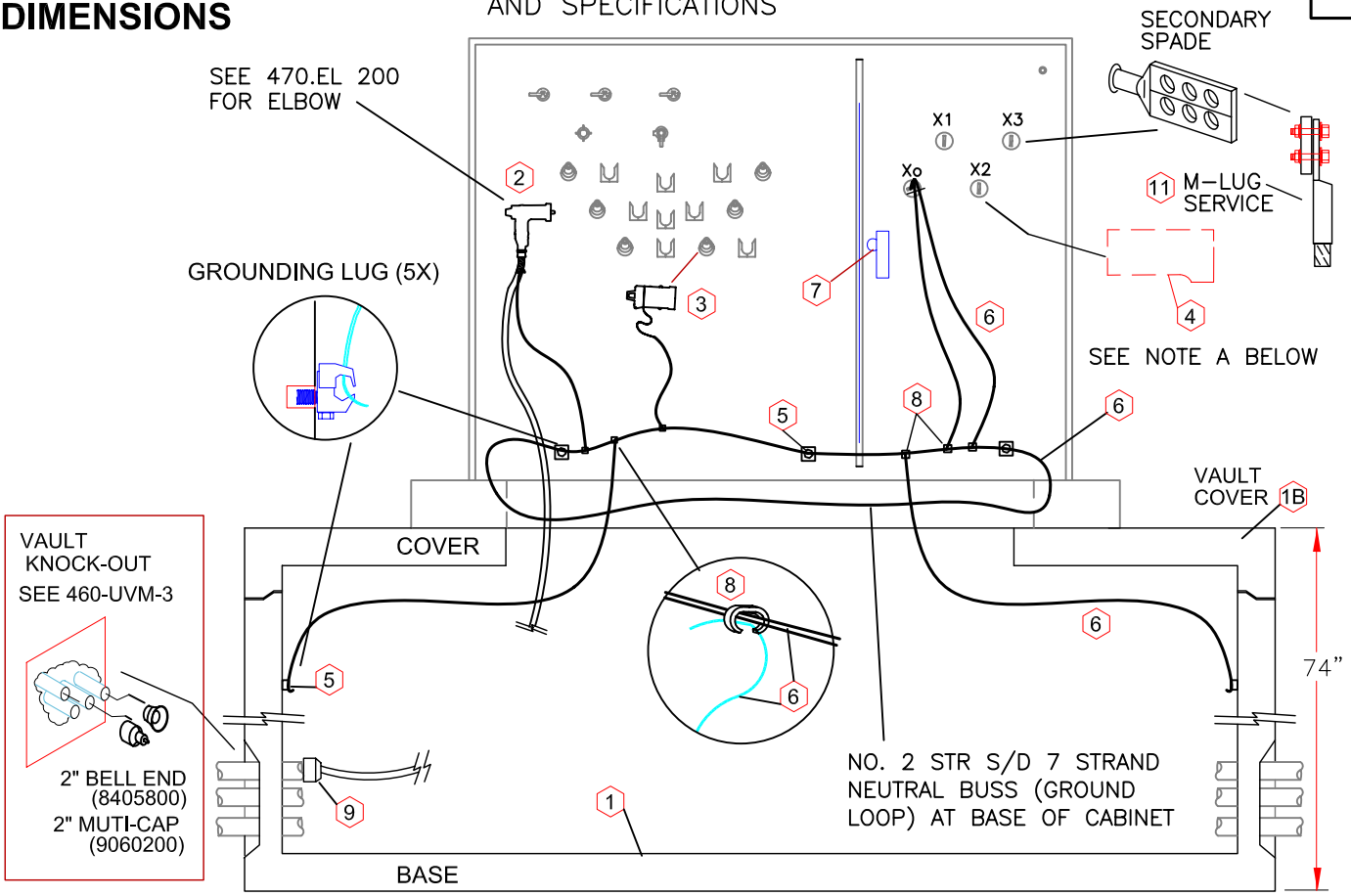

ITEM	DESCRIPTION	500-2500KVA		STOCK #
		PT3V-2L	PT3V-2R	
1A	VAULT 84" x 84" x 66"	1	1	9975600
1B	COVER 96" x 96" x 8"	1	1	9975601
2	ELBOW LB 1/0 AL 15KV	6	3	9300500
+2	ELBOW LB 1/0 AL 25KV	6	3	9301500
3	xxx GRD. PROTECTIVE CAP 15KV	0	3	9410500
+3	xxx GRD. PROTECTIVE CAP 25KV	0	3	9410600
4	xxx MULTI-LUG COVER PM TSF 6-HOLE	3	3	6600810
5	xxx GROUNDING CONNECTOR	3	3	6589900
6	xxx NO. 2 STR SID 7 STRAND	24FT	24FT	5080700
7	xxx TRANSFORMER LOCK	1	1	9979900
8	xxx CRIMPIT 2-2	8	8	6060700
9	xxx MULTI-CAP 2"	6	3	9060200
10	**PADMOUNT TRANSFORMER (SEE 820.TR)**	1	1	**AS REQ'D**
11	**xxx M-LUG (SERVICE)**	4	4	**AS REQ'D**

NOTE A. FOR CONDUCTORS LARGER THAN 350 MCM ELECTRICAL CONTRACTOR WILL SUPPLY SECONDARY CONNECTIONS & BOLTING HARDWARE TO BE INSTALLED BY DISTRICT PERSONNEL. SEE ELECTRICAL SERVICE REQUIREMENTS FOR DETAILS.

DATE: 08/20/04
REV: 5/22/2007
DRAWN: JK/DT
CHK: RA/DP
PG 2 OF 2
FILE: H:\ENGSTANDARDS\05 SPECB\400-DIST\430 TRSF\PT3V-2

GROUP: PADMOUNT TRANSFORMER - VAULT
TYPE: THREE PHASE - (500-2500KVA)

4/O ELBOW, (RADIAL OR LOOP FEED) INSTALLATION

PT3V-2

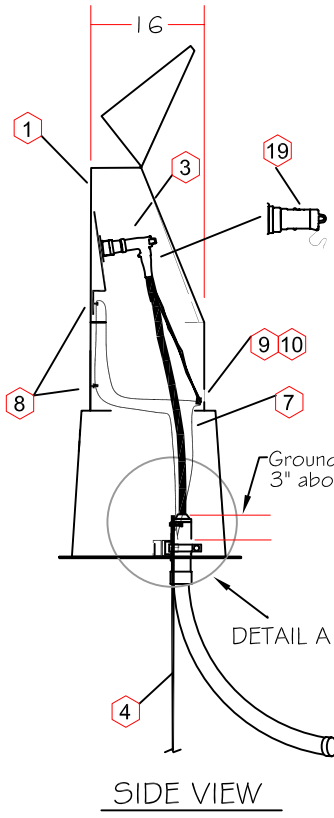

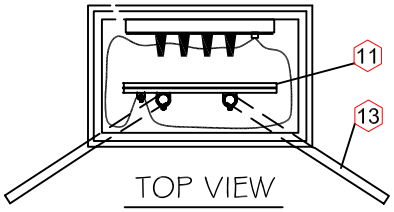

NOTE:
See PUD Specifications for Padmount Installation, Backfill Material and Compaction Requirements.

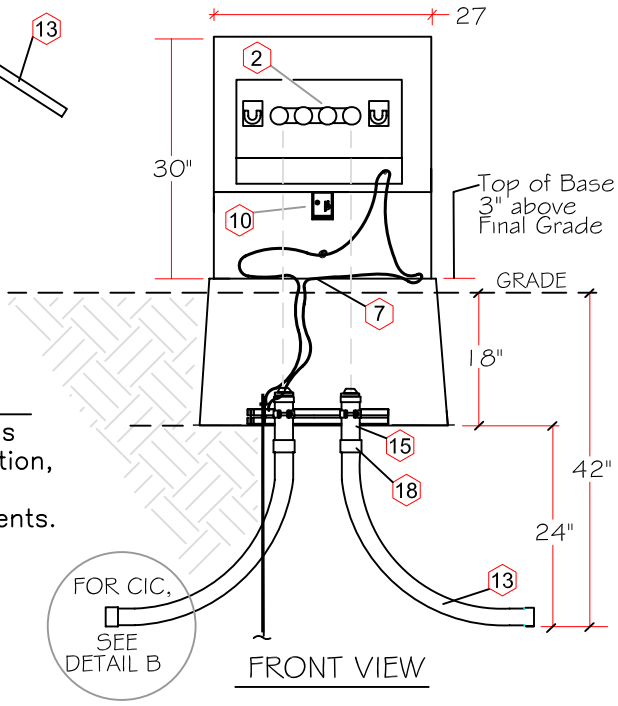

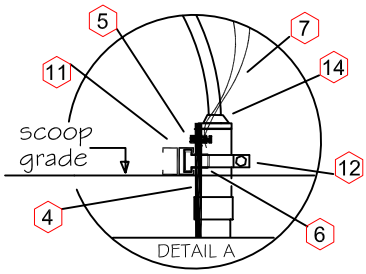

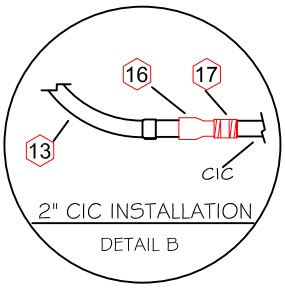

ITEM	DESCRIPTION	QNTY JP1	STOCK #
1	J-BOX 1 PHASE 15/25KV	1	9972200
2	FEEDTHRU 4W PORT 15 KV W/STRAPS	1	9400700
+2	FEEDTHRU 4W PORT 25 KV W/STRAPS	1	9401100
3	ELBOW LB 1/0 AL 15KV	2	9300500
+3	ELBOW LB 1/0 AL 25KV	2	9301500
4	xxx - GROUND ROD 8' x 5/8" CU	1	3420800
5	xxx - GROUND ROD CLAMP 5/8 BRNZ	1	6663900
6	xxx - CLAMP 5/8 GRND ROD CINCH	1	8995000
7	xxx - 2 CU SD 7-STRAND	15FT	5080700
8	xxx - GROUNDING CONNECTOR	2	6589900
9	xxx - CRIMPET 2-2	4	6060700
10	xxx - TRANSFORMER LOCK	1	9979900
11	xxx - UNI-STRUT 24 GALV	1	8995500
12	xxx - CINCH CLAMP - 2" TWO PIECE	2	8955520
13	xxx SWEEP 2" PVC 90deg	2	8132800
14	xxx - MULTI CAP 2"	2	9060200
15	CONDUIT 2" - SCH 40 PVC - 10'	10FT	8030800
16	xxx ADAPTER MALE 2"-PVC	2	8303200
17	xxx COUPLING - 2" PVC - CIC AL	2	8382000
18	xxx COUPLING - 2" PVC	2	8383200
19	xxx GRND PROTECT CAP 15KV	2	9410500
+19	xxx GRND PROTECT CAP 25KV	2	9410600

(NOTE: USE A PLUS SIGN BEFORE THE ASSEMBLY NUMBER FOR 25KVA APPLICATIONS, +JP1..)

DATE: 08/20/04
REV: 5/23/2007
DRAWN: JK/DT
CHK: RA/DP
PG 1 OF 1
FILE: H:\ENGSTANDARDS\05 SPECBOOK\400-DISTRIB_UG\430-JBOX\JP1_UG

GROUP: JUNCTION BOX - PADMOUNT - 200AMP
TYPE: SINGLE PHASE (4-WAY), 15/25KV, LOOP FEED

OPTIONS: w/ 5-WAY FEEDTHRU See JP1-5

JP1

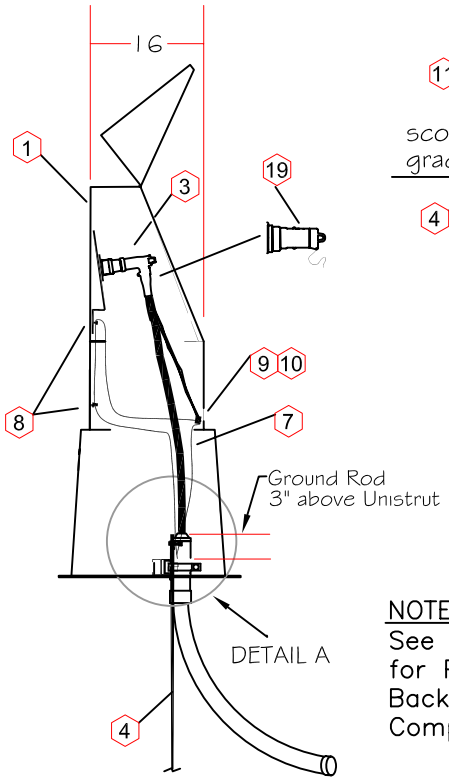

SIDE VIEW

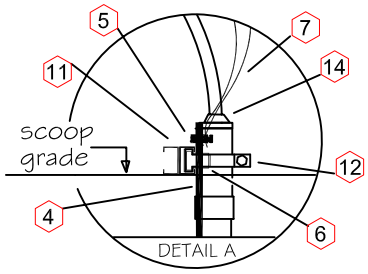

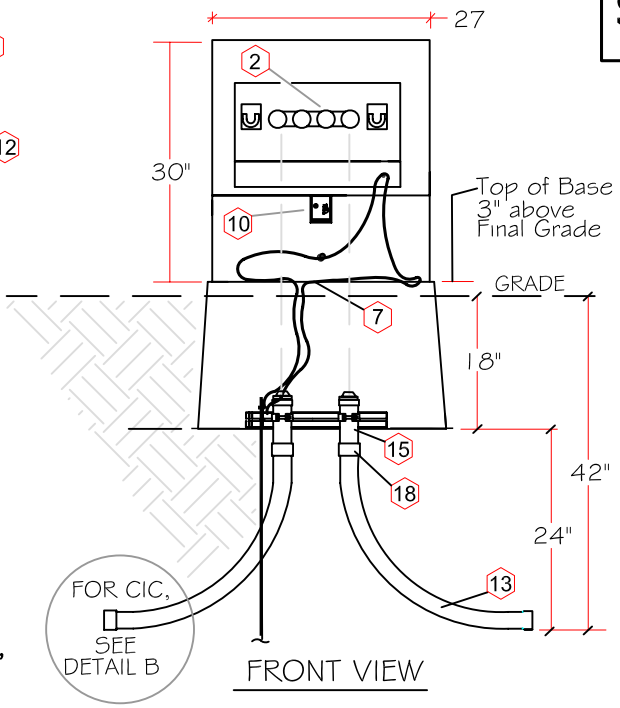

FRONT VIEW

NOTE:
See PUD Specifications for Padmount Installation, Backfill Material and Compaction Requirements.

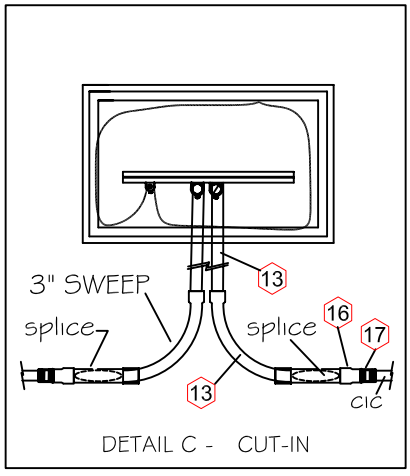

DETAIL C - CUT-IN

ITEM	DESCRIPTION	QNTY JP1-C	STOCK #
1	J-BOX 1 PHASE 15/25KV	1	9972200
2	FEEDTHRU 4W PORT 15 KV W/STRAPS	1	9400700
+2	FEEDTHRU 4W PORT 25 KV W/STRAPS	1	9401100
3	ELBOW LB 1/0 AL 15KV	2	9300500
+3	ELBOW LB 1/0 AL 25KV	2	9301500
4	xxx - GROUND ROD 8' x 5/8" CU	1	3420800
5	xxx - GROUND ROD CLAMP 5/8 BRNZ	1	6663900
6	xxx - CLAMP 5/8 GRND ROD CINCH	1	8995000
7	xxx - 2 CU SD 7-STRAND	15FT	5080700
8	xxx - GROUNDING CONNECTOR	2	6589900
9	xxx - CRIMPET 2-2	6	6060700
10	xxx - TRANSFORMER LOCK	1	9979900
11	xxx - UNI-STRUT 24 GALV	1	8995500
12	xxx - CLAMP 2-PIECE 3 STANDOFF	2	8955730
13	xxx - SWEEP 3" PVC 90deg	4	8133500
14	xxx - MULTI CAP 3"	2	9060300
15	CONDUIT 3" - SCH 40 PVC - 10'	10FT	8031200
16	XXX REDUCER 3 TO 2 PVC	2	8308000
17	xxx - COUPLING - 2" PVC - CIC AL	2	8382000
18	xxx - COUPLING - 3" PVC	2	8384000
19	xxx - GRND PROTECT CAP 15KV	2	9410500
+19	xxx - GRND PROTECT CAP 25KV	2	9410600

(NOTE: USE A PLUS SIGN BEFORE THE ASSEMBLY NUMBER FOR 25KVA APPLICATIONS, +JP1-C..)

DATE: 08/20/04
REV: 5/23/2007
DRAWN: JK/DT
CHK: RA/DP
PG 1 OF 1
FILE: H:\ENGSTANDARDS\05 SPECBOOK\400-DISTRIB_UG\430-JBOX\JP1_UG

GROUP: JUNCTION BOX - PADMOUNT - 200AMP
TYPE: SINGLE PHASE (4-WAY), 15/25KV, CUT-IN

OPTIONS: Single Phase, Loop Feed SEE JP1

JP1-C

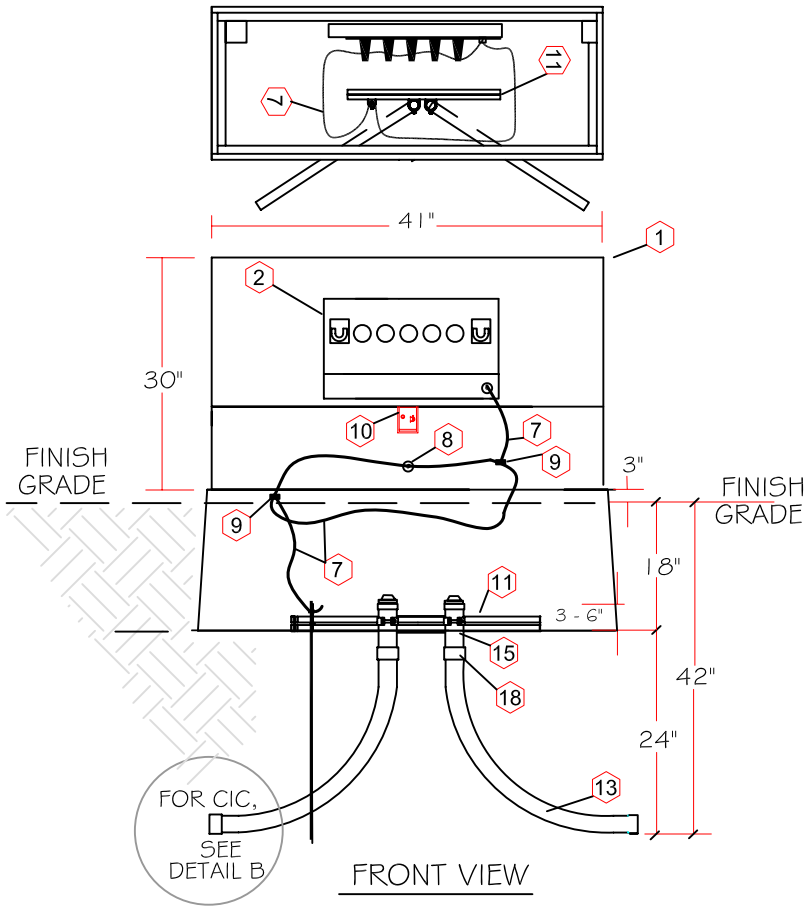

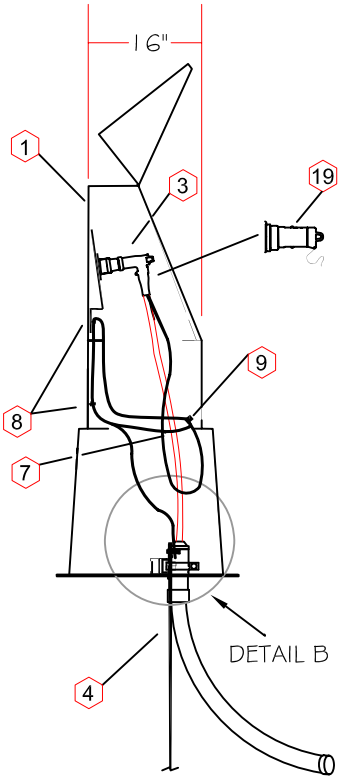

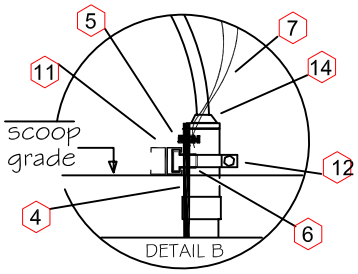

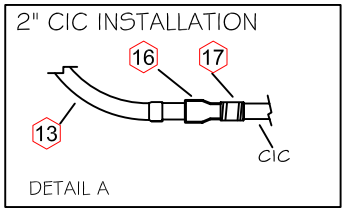

ITEM	DESCRIPTION	QNTY JP1-5	STOCK #
1	J-BOX "V-PHASE" BODY 15/25KV	1	9972400
2	FEEDTHRU 5W PORT 15 KV W/STRAPS	1	9400800
3	ELBOW LB 1/0 AL 15KV	2	9300500
4	xxx - GROUND ROD 8' x 5/8" CU	1	3420800
5	xxx - GROUND ROD CLAMP 5/8 BRNZ	1	6663900
6	xxx - CLAMP 5/8 GRND ROD CINCH	1	8995000
7	xxx - 2 CU SD 7-STRAND	16FT	5030300
8	xxx - GROUNDING CONNECTOR	2	6589900
9	xxx - CRIMPET 2-2	8	6060700
10	xxx - TRANSFORMER LOCK	1	9979900
11	xxx - UNI-STRUT 24 GALV	1	8995500
12	xxx - CINCH CLAMP - 2" TWO PIECE	2	8955520
13	xxx - SWEEP 2" PVC 90deg	2	8132800
14	xxx - MULTI CAP 2"	2	9060200
15	CONDUIT 2" - SCH 40 PVC - 10'	10FT	8030800
16	xxx - ADAPTER MALE 2"-PVC	2	8303200
17	xxx - COUPLING - 2" PVC - CIC AL	2	8382000
18	xxx - COUPLING - 2" PVC	2	8383200
19	xxx - GRND PROTECT CAP 15KV	3	9410500

DATE: 08/20/04
REV: 5/23/2007
DRAWN: JK/DT
CHK: RA/DP
PG 1 OF 1
FILE: H:\ENGSTANDARDS\05 SPECBOOK\400-DISTRIB_UG\430-JBOX\JP1.5

GROUP: JUNCTION BOX - PADMOUNT - 200AMP
TYPE: SINGLE PHASE (5-WAY), 15KV - LOOP FEED

OPTIONS: SINGLE PHASE (4-WAY), SEE JP1

JP1-5

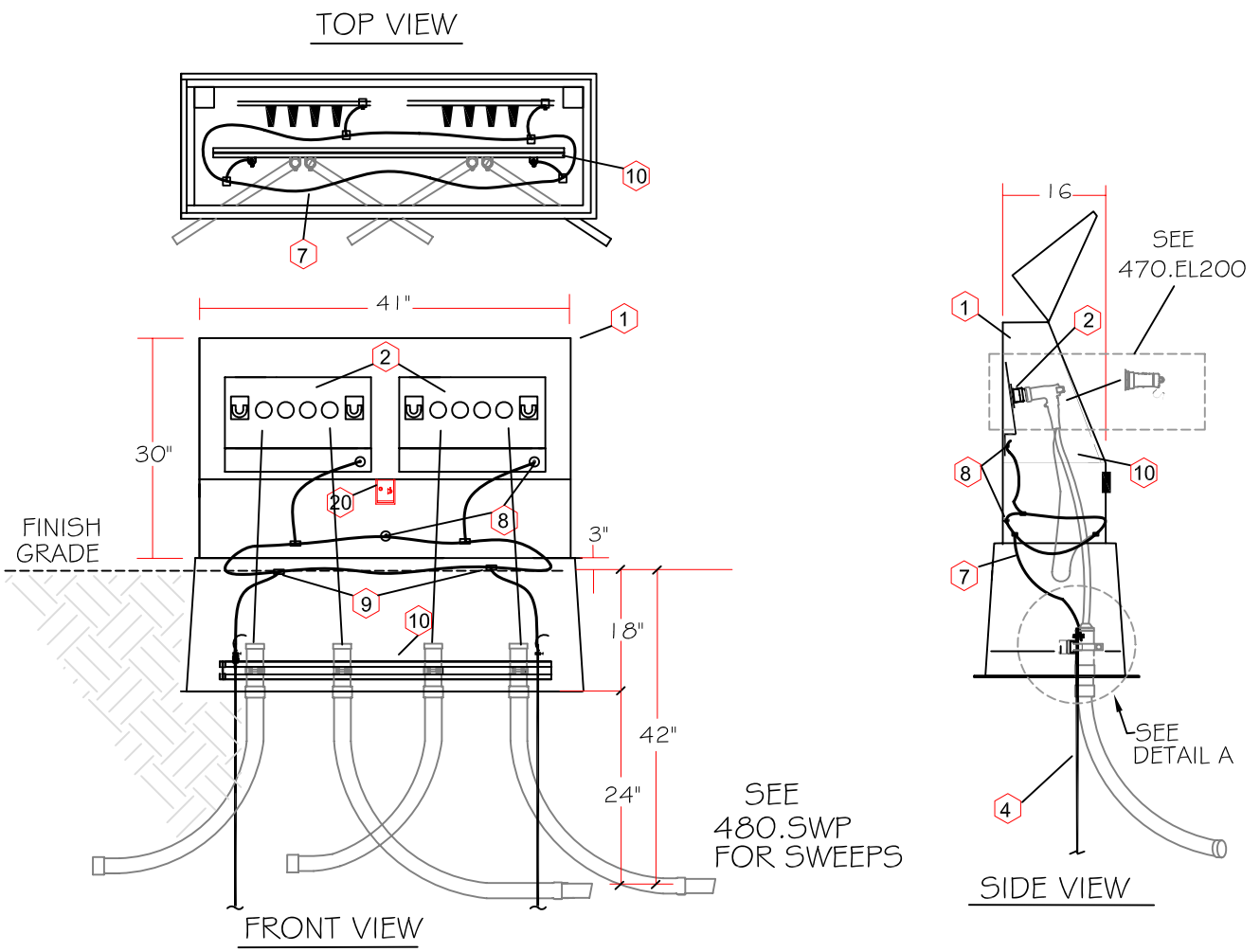

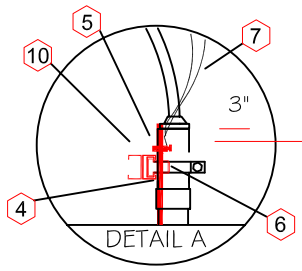

ITEM	DESCRIPTION	QNTY JP2	STOCK #
1	J-BOX V PHASE 15/25KV	1	9972400
2	FEEDTHRU 4W PORT 15 KV W/STRAPS	2	9400700
+2	FEEDTHRU 4W PORT 25 KV W/STRAPS	2	9401100
4	xxx - GROUND ROD 8' x 5/8" CU	2	3420800
5	xxx - GROUND ROD CLAMP 5/8 BRNZ	2	6663900
6	xxx - CLAMP 5/8 GRND ROD CINCH	2	8995000
7	xxx - 2 CU SD 7-STRAND	16FT	5080700
8	xxx - GROUNDING CONNECTOR	4	6589900
9	xxx - CRIMPET 2-2	3	6060700
10	xxx - UNI-STRUT48" GALV	1	8995600
20	xxx - TRANSFORMER LOCK	1	9979900
	ELBOWS & GRND. PROT CAP		
	SEE 470.EL200		
	SWEEPS		
	SEE 480.CSF-3		

(NOTE: USE A PLUS SIGN BEFORE THE ASSEMBLY NUMBER FOR 25KV APPLICATIONS, +JP2...)

DATE: 08/20/04
REV: 5/24/2007
DRAWN: JK/DT
CHK: RA/DP
PG 1 OF 1
FILE: H:\ENGSTANDARDS\05 SPECBOOK\400-DISTRIB_UG\430-JBOX\JP2

GROUP: JUNCTION BOX - PADMOUNT - 200AMP
TYPE: V-PHASE (15/25KV)

OPTIONS: SEE JP2-1 (1/0 ELBOW w/ 2" PVC, LOOP FEED)
SEE JP2-2 (1/0 ELBOW w/ 2" CIC, LOOP FEED)

JP2

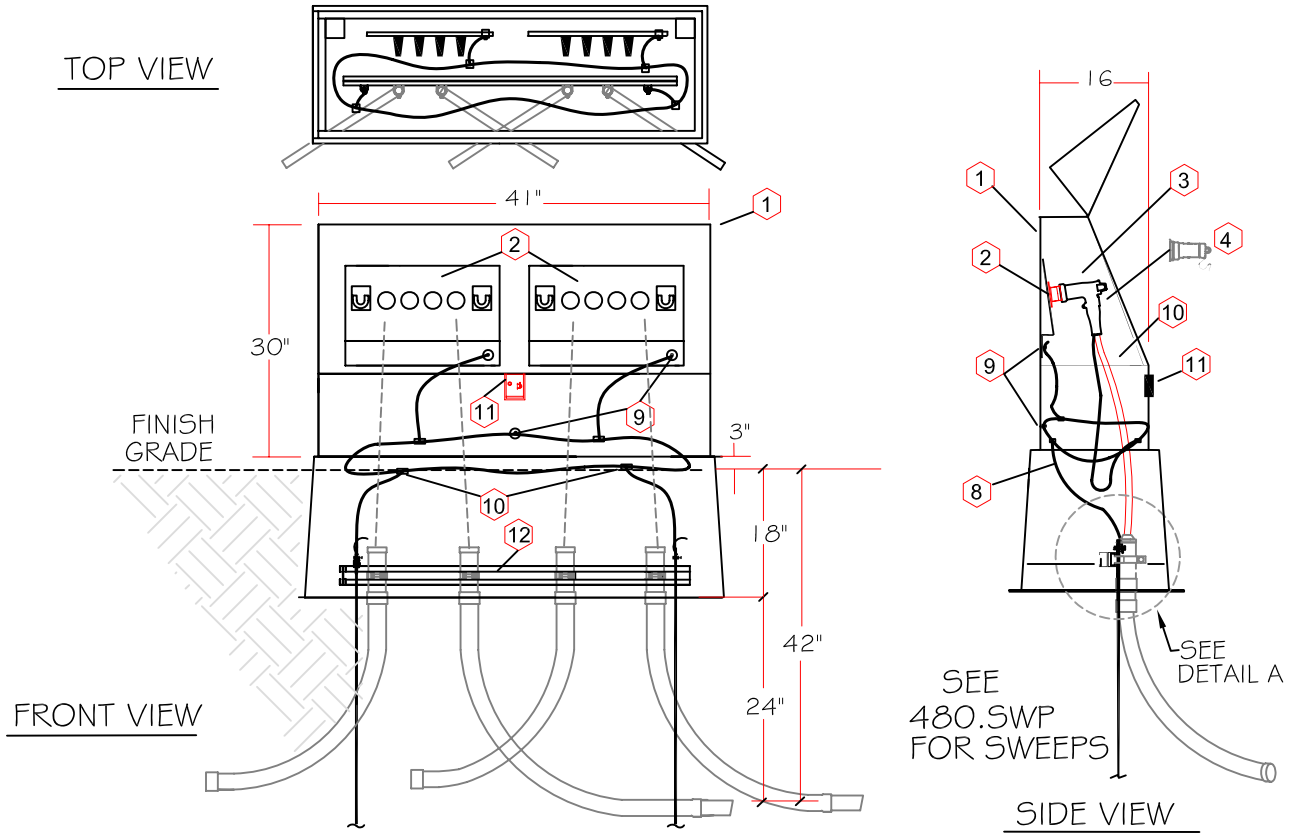

JP2-2 FOR CIC

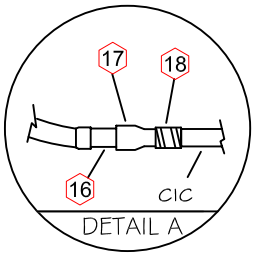

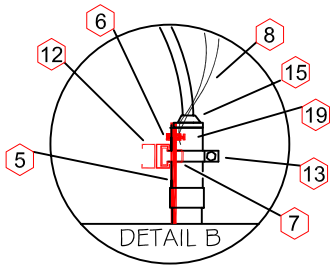

ITEM	DESCRIPTION	QNTY JP2-1	QNTY JP2-2	STOCK #
1	J-BOX V PHASE 15/25KVA	1	1	9972400
2	FEEDTHRU 4W - 15KV W/STRAPS	2	2	9400700
2+	FEEDTHRU 4W - 25KV W/STRAPS	2	2	9401100
3	ELBOW LB 1/0 AL 15KV	4	4	9300500
3+	ELBOW LB 1/0 AL 25KV	4	4	9301500
4	xxx - GROUND PROTECT CAP 15KV	4	4	9410500
4+	xxx - GROUND PROTECT CAP 25KV	4	4	9410600
5	xxx - GROUND ROD 8' x 5/8" CU	2	2	3420800
6	xxx - GROUND ROD CLAMP 5/8 BRNZ	2	2	6663900
7	xxx - CLAMP 5/8 GRND ROD CINCH	2	2	8995000
8	xxx - 2 CU SD 7-STRAND	16FT	16FT	5080700
9	xxx - GROUNDING CONNECTOR	4	4	6589900
10	xxx - CRIMPET 2-2	10	10	6060700
11	xxx - TRANSFORMER LOCK	1	1	9979900
12	xxx - UNI-STRUT 45" GALV	1	1	8995600
13	xxx - CLAMP 2 PIECE 2" STANDOFF	4	4	8955520
14	xxx - SWEEP 2" PVC 90deg	4	4	8132800
15	xxx - MULTI CAP 2"	4	4	9060200
16	CONDUIT 2" - SCH 40 PVC - 10'	10FT	10FT	8030800
17	xxx - ADAPTER MALE 2"-PVC	0	4	8303200
18	xxx - COUPLING - 2" PVC - CIC AL	0	4	8382000
19	xxx - COUPLING - 2" PVC	4	4	8383200

(USE A PLUS SIGN BEFORE THE ASSEMBLY NUMBER FOR 25KV APPLICATIONS, +JP2...)

DATE: 08/20/04
REV: 5/24/2007
DRAWN: JK/DT
CHK: RA/DP
FILE: H:\ENGSTANDARDS\05 SPECBOOK\400-DISTRIB_UG\430-JBOX\JP2-1 SET

PG 1 OF 1

GROUP: JUNCTION BOX - PADMOUNT - 200AMP
TYPE: V-PHASE (15/25KV)

OPTIONS:
- JP2-1 (1/O ELBOW W/ 2" PVC, LOOP FEED) — **JP2-1**
- JP2-1 (1/O ELBOW W/ 2" CIC, LOOP FEED) — **JP2-2**

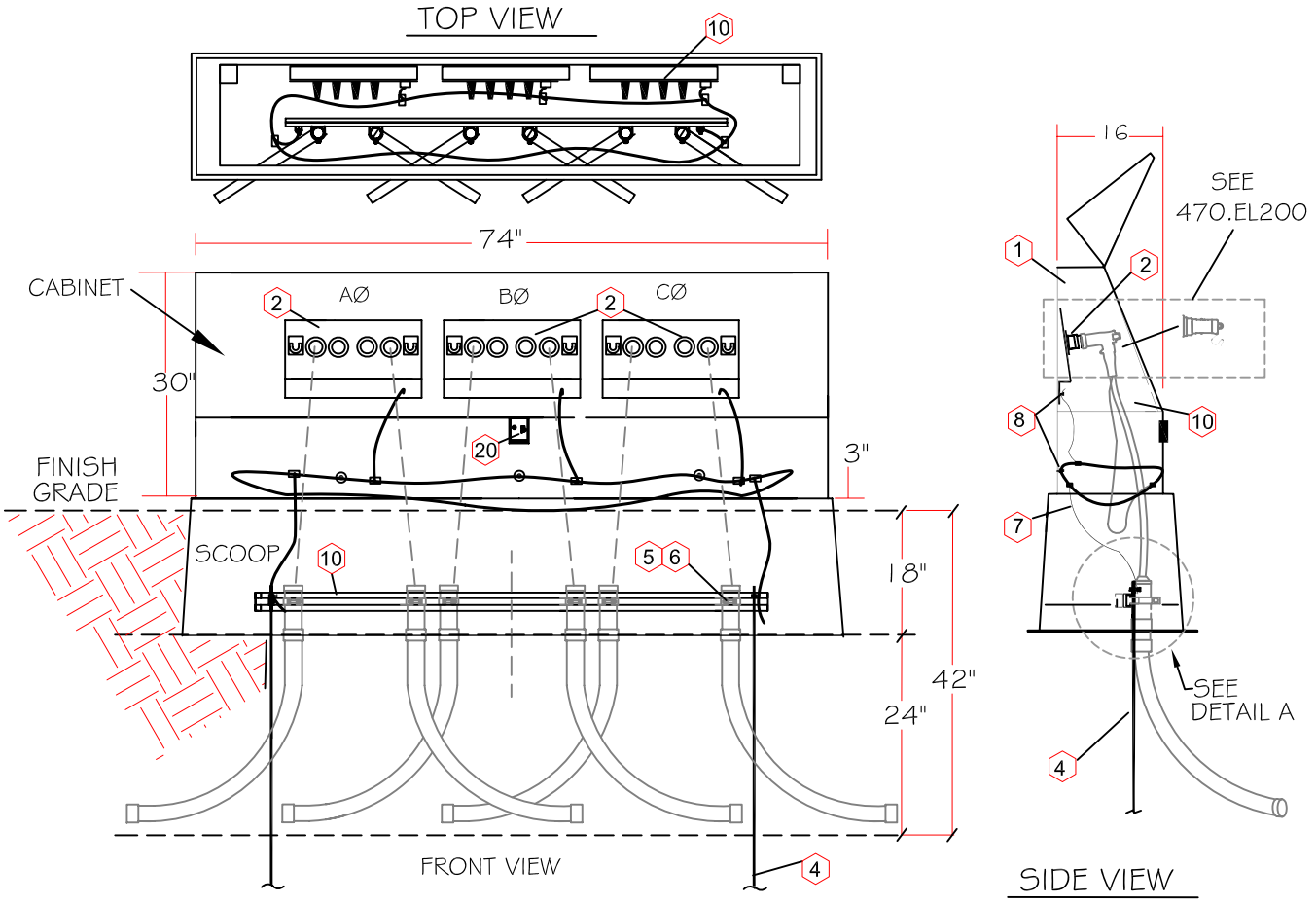

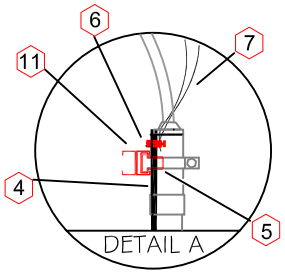

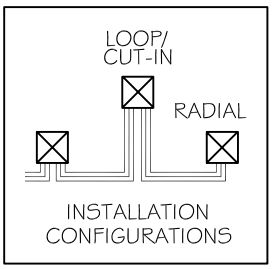

(USE A PLUS SIGN BEFORE THE ASSEMBLY NUMBER FOR 25KV APPLICATIONS, +JP3...)

ITEM	DESCRIPTION	QNTY JP3	STOCK #
1	J-BOX 3 PHASE 15/25KV	1	9972600
2	FEEDTHRU 4W PORT 15 KV W/STRAPS	3	9400700
+2	FEEDTHRU 4W PORT 25 KV W/STRAPS	3	9401100
4	xxx - GROUND ROD 8' x 5/8" CU	2	3420800
5	xxx - GROUND ROD CLAMP 5/8 BRNZ	2	6663900
6	xxx - CLAMP 5/8 GRND ROD CINCH	2	8995000
7	xxx - 2 CU SD 7-STRAND	24ft	5080700
8	xxx - GROUNDING CONNECTOR	5	6589900
9	xxx - CRIMPET 2-2	5	6060700
10	xxx - UNI-STRUT 60 GALV	1	8995700
20	xxx - TRANSFORMER LOCK	1	9979900
	ELBOWS & GRND. PROT CAP		
	SEE 470.EL200		
	SWEEPS		
	SEE 480.CSF-3		

Note: See PUD Specifications for Padmount installation, Backfill Material and Compaction Requirements.

DATE: 08/20/04
REV: 5/24/2007
DRAWN: JK/DT
CHK: RA/DP
FILE: H:\ENGSTANDARDS\05 SPECBOOK\400_UG\430-JBOX\JP3_UG

PG 1 OF 1

GROUP: JUNCTION BOX - PADMOUNT - 200AMP
TYPE: 3-PHASE (15KV- 25KV)

OPTIONS: SEE JP3-1 (1/0 ELBOW w/ 2" PVC, LOOP FEED)
SEE JP3-2 (1/0 ELBOW w/ 2" CIC, LOOP FEED)

JP3

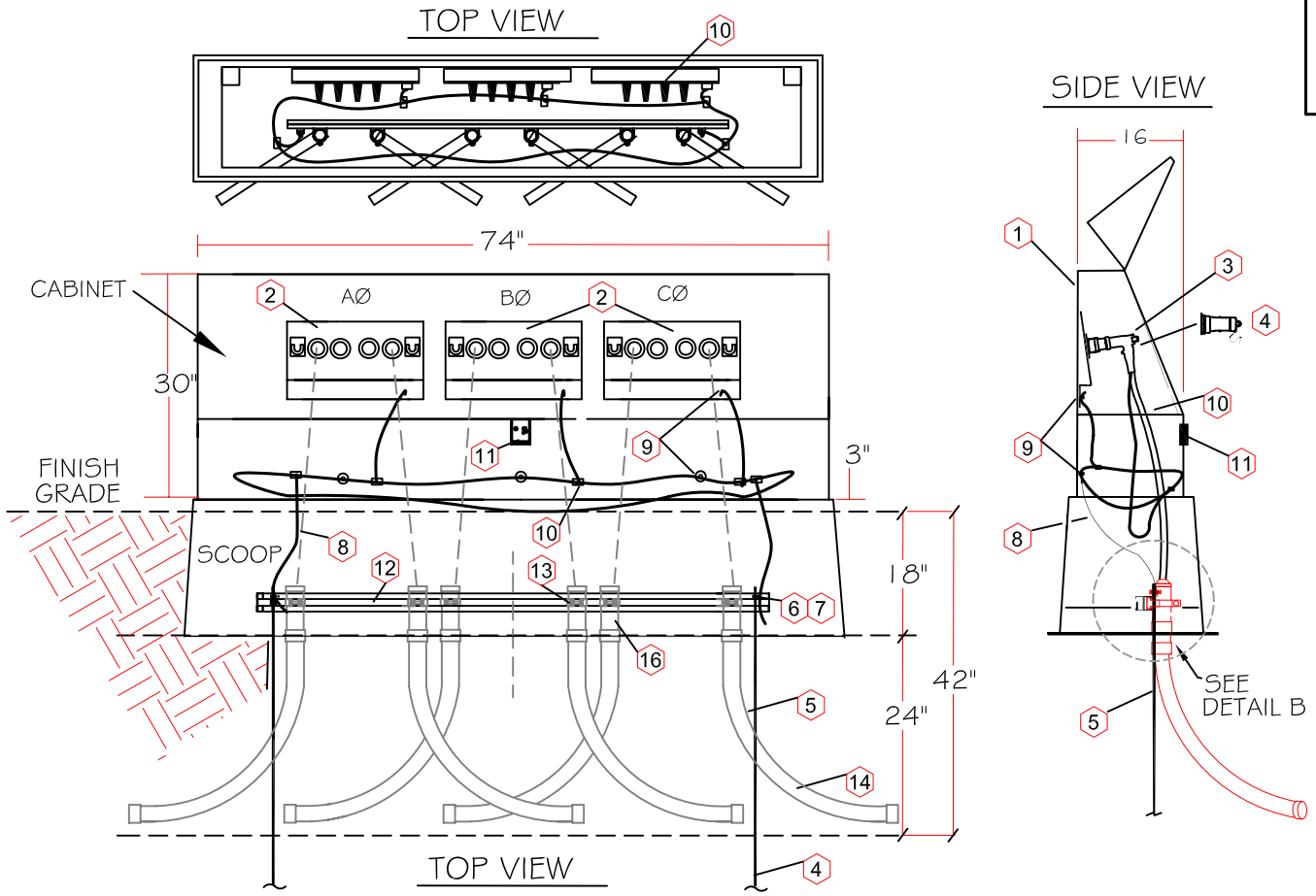

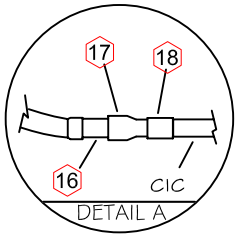

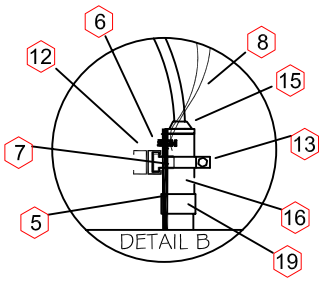

ITEM	DESCRIPTION	PVC JP3-1	CIC JP3-2	STOCK #
1	J-BOX 3 PHASE 15/25KVA	1	1	9972600
2	FEEDTHRU 4W - 15KV W/STRAPS	3	3	9400700
+2	FEEDTHRU 4W - 25KV W/STRAPS	3	3	9401100
3	ELBOW LB 1/0 AL 15KV	6	6	9300500
+3	ELBOW LB 1/0 AL 25KV	6	6	9301500
4	xxx - GROUND PROTECT CAP 15KV	6	6	9410500
+4	xxx - GROUND PROTECT CAP 25KV	6	6	9410600
5	xxx - GROUND ROD 8' x 5/8" CU	2	2	3420800
6	xxx - GROUND ROD CLAMP 5/8 BRNZ	2	2	6663900
7	xxx - CLAMP 5/8 GRND ROD CINCH	2	2	8995000
8	xxx - 2 CU SD 7-STRAND	24FT	24FT	5080700
9	GROUNDING CONNECTOR	5	5	6589900
10	CRIMPET 2-2	16	16	6060700
11	xxx - TRANSFORMER LOCK	2	2	9979900
12	xxx - UNI-STRUT 60" GALV	1	1	8995700
13	xxx - CLAMP 2 PIECE 2" STANDOFF	6	6	8955520
14	SWEEP 2" PVC 90deg	6	6	8132800
15	xxx - MULTI CAP 2"	6	6	9060200
16	CONDUIT 2" - SCH 40 PVC - 10'	20FT	20FT	8030800
17	xxx - ADAPTER MALE 2"-PVC	0	6	8303200
18	COUPLING - 2" PVC - CIC AL	0	6	8382000
19	COUPLING - 2" PVC	6	6	8383200

DATE: 08/20/04
REV: 04/12/07
DRAWN: JK/DT
CHK: RA/DP
PG 1 OF 1
FILE: H:\ENGSTANDARDS\05 SPECBOOK\400-DISTRIB_UG\430 JBOX\JP3-1SET

GROUP: JUNCTION BOX - PADMOUNT - 200AMP
TYPE: 3-PHASE (15KV - 25KV)

OPTIONS: JP3-1 (1/0 ELBOW w/ 2" PVC, LOOP FEED) — **JP3-1**
JP3-2 (1/0 ELBOW w/ 2" CIC, LOOP FEED) — **JP3-2**

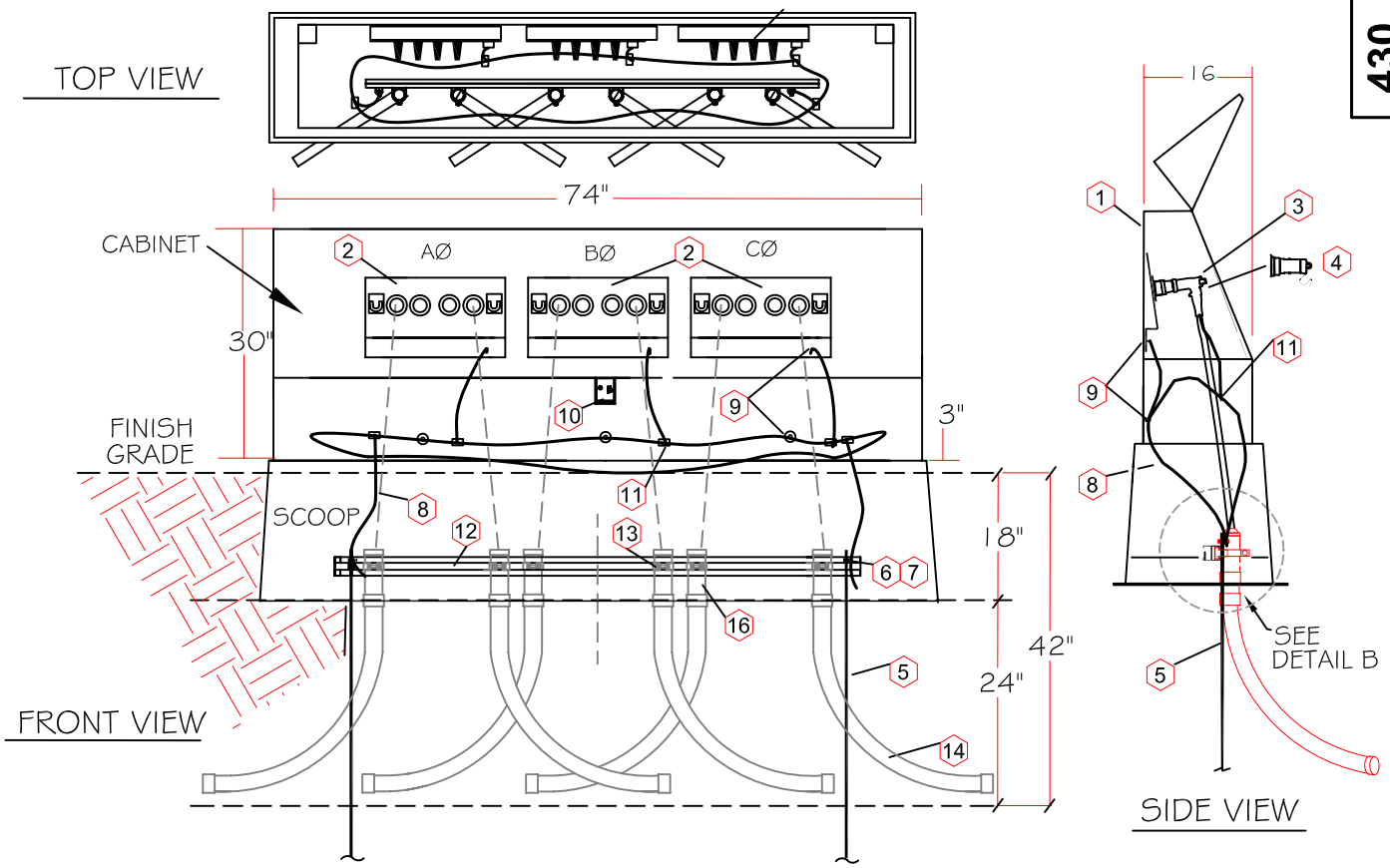

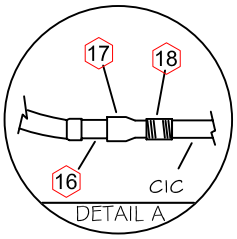

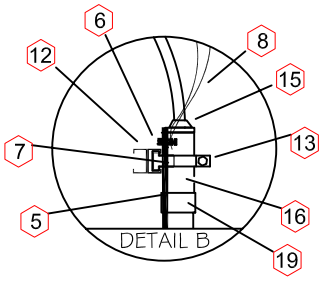

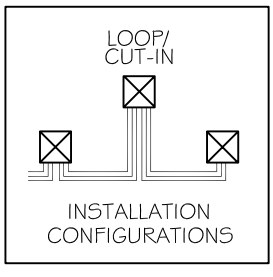

ITEM	DESCRIPTION	15KV JP3-3	25KV +JP3-3	STOCK #
1	J-BOX 3 PHASE 15/25KV	1	1	9972600
2	FEEDTHRU 4W - 15KV W/STRAPS	3	0	9400700
+2	FEEDTHRU 4W - 25KV W/STRAPS	0	3	9401100
3	ELBOW LB 4/0 AL 15KV	6	0	9301000
+3	ELBOW LB 4/0 AL 25KV	0	6	9302000
4	xxx - GROUND PROTECT CAP 15KV	6	0	9410500
+4	xxx - GROUND PROTECT CAP 25KV	0	6	9410600
5	xxx - GROUND ROD 8' x 5/8" CU	2	2	3420800
6	xxx - GROUND ROD CLAMP 5/8 BRNZ	2	2	6663900
7	xxx - CLAMP 5/8 GRND ROD CINCH	2	2	8995000
8	xxx - 2 CU SD 7-STRAND	18FT	18FT	5080700
9	xxx - GROUNDING CONNECTOR	5	5	6589900
10	xxx - TRANSFORMER LOCK	2	2	9979900
11	xxx - CRIMPET 2-2	15	15	6060700
12	xxx - UNI-STRUT 60" GALV	1	1	8995700
13	xxx - CLAMP 2 PIECE 3" STANDOFF	6	6	8955730
14	xxx - SWEEP 3" PVC 90deg	6	6	8133500
15	xxx - MULTI CAP 3"	6	6	9060300
16	CONDUIT 3" - SCH 40 PVC - 10'	20FT	20FT	8031200
17	xxx - ADAPTER MALE 3"-PVC	6	6	8304000
18	xxx - COUPLING - 3" PVC - CIC AL	6	6	8382300
19	xxx - COUPLING - 3" PVC	6	6	8384000

DATE: 08/20/04
REV: 5/24/2007
DRAWN: JK/DT
CHK: RA/DP
PG 1 OF 1
FILE: H:\ENGSTANDARDS\05 SPECBOOK\400-DISTRIB_UG\430 JBOX\JP3-1SET

GROUP: JUNCTION BOX - PADMOUNT - 200AMP
TYPE: 3-PHASE - 4/O ELBOW - 3" CONDUIT

OPTIONS:	15KV	JP3-3
	25KV	+JP3-3

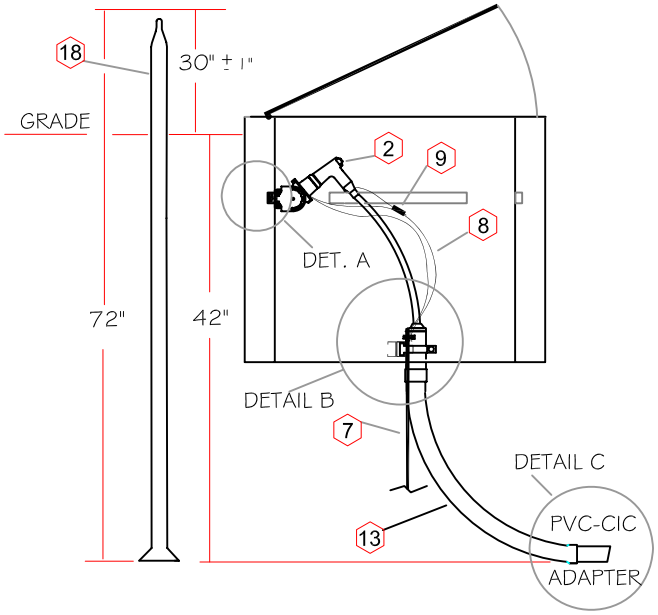

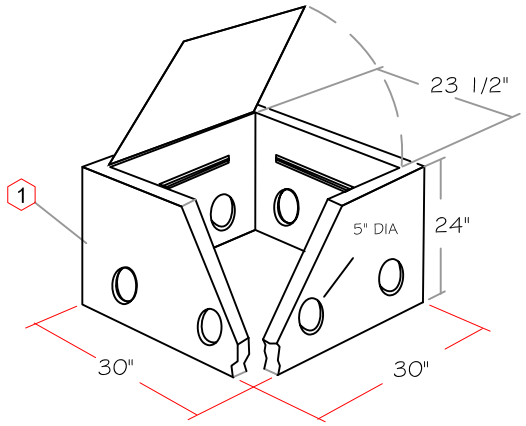

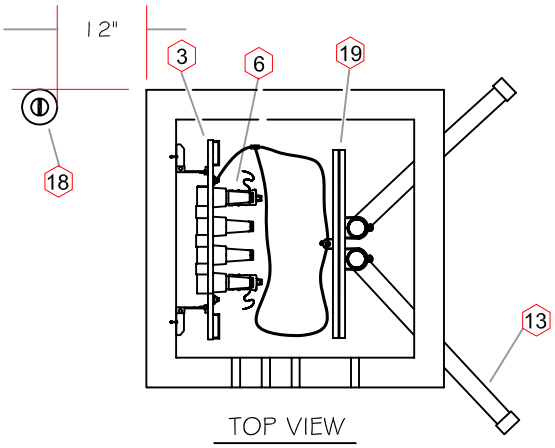

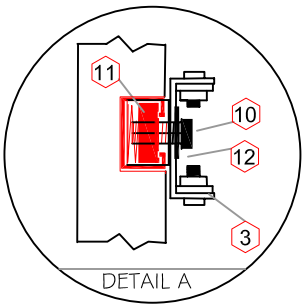

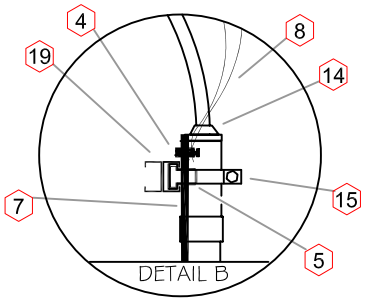

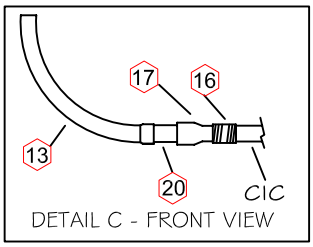

ITEM	DESCRIPTION	w/PVC JV1-1	w/CIC JV1-2	STOCK #
1	VAULT 30x30 W/STEEL LID	1	1	9974800
2	ELBOW LB 1/0 AL 15KV	2	2	9300500
+2	ELBOW LB 1/0 AL 25KV	2	2	9301500
3	FEEDTHRU 4W - 15KV W/BRKT	1	1	9400400
+3	FEEDTHRU 4W - 25KV W/BRKT	1	1	9401500
4	xxx - GROUND ROD CLAMP 5/8 BRNZ	1	1	6663900
5	xxx - CLAMP 5/8 GRND ROD CINCH	1	1	8995000
6	xxx - GROUND PROT. CAP -15KV	2	2	9410500
+6	xxx - GROUND PROT. CAP -25KV	2	2	9410600
7	xxx - GRND ROD 8' x 5/8"	1	1	3420800
8	xxx - 2 CU SD 7-STRAND	8FT	8FT	5080700
9	xxx - CRIMPET 2-2	3	3	6060700
10	xxx - SS BOLT 1" x 1/2"	2	2	3131800
11	xxx - UNISTRUT NUT 1/2"	2	2	3224000
12	xxx - SS WASHER 1/2" ROUND	2	2	3330000
13	xxx - SWEEP 2" PVC 90deg	2	2	8132800
14	xxx - MULTI CAP 2"	2	2	9060200
15	xxx - CLAMP 2 PIECE 2" STANDOFF	2	2	8955520
16	xxx - COUPLING - 2" PVC - CIC AL	0	2	8382000
17	xxx - ADAPTER MALE 2"-PVC	0	2	8303200
18	xxx - RED MARKING STAKE 72"	1	1	9059772
19	xxx - UNI-STRUT 24" GALV	1	1	8995500
20	CONDUIT 2" - SCH 40 PVC - 10'	20FT	20FT	8030800

DATE: 08/20/04
REV: 5/24/2007
DRAWN: JK/DT
CHK: RA/DP
PG 1 OF 1
FILE: H:\ENGSTANDARDS\05 SPEC\400-UG DIST\430-JUNCTION BOX\JV1

GROUP: JUNCTION BOXES
TYPE: VAULT - SINGLE PHASE

OPTIONS:		
	PVC Installation, 1/O Elbow	**JV1-1**
	CIC Installation, 1/O Elbow	**JV1-2**

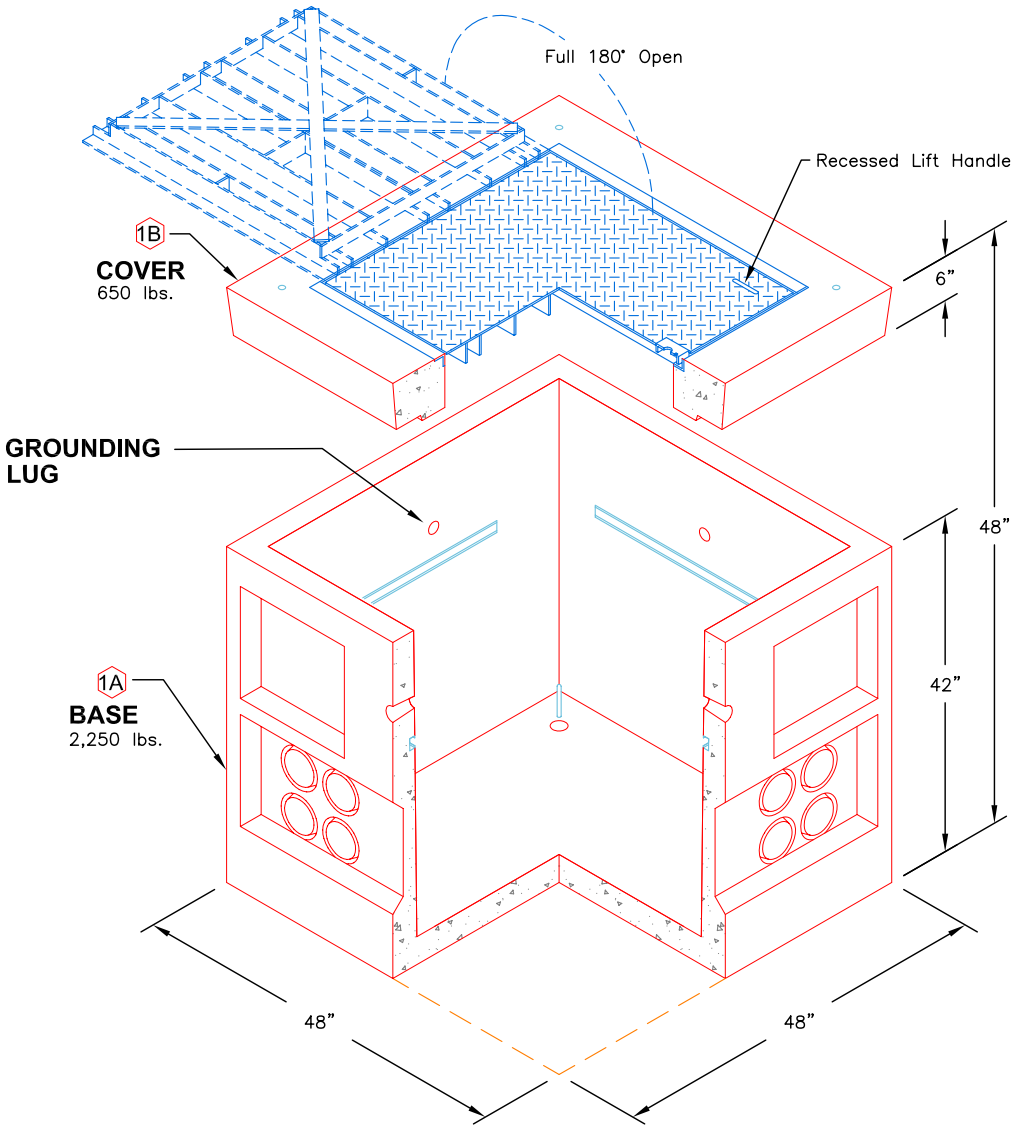

ITEM	DESCRIPTION	QUANTITY JV2-200	STOCK #
1A	VAULT 48" x 48" x 42" (444-LA)	1	9974700
1B	COVER 48" x 48" x 6" W/ STEEL LID	1	9974701

NOTES:

DATE: 08/20/04
REV: 12/01/06
DRAWN: DT
CHK: RA/DP
PG 1 OF 3
FILE: H:\ENGSTANDARDS\05 SPECBOOK\400-DIST_UG\430\JV2-200

GROUP: JUNCTION VAULT - 200AMP
TYPE: TWO PIECE W/ STEEL LID

SIZE: 48" x 48" x 48"

JV2-200

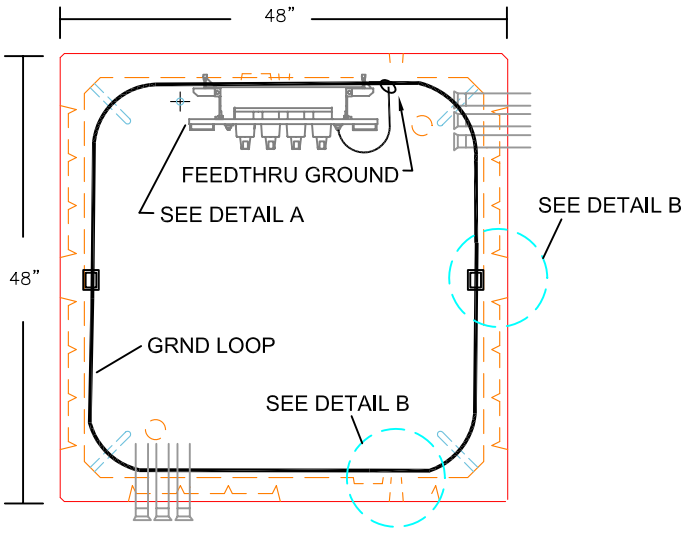

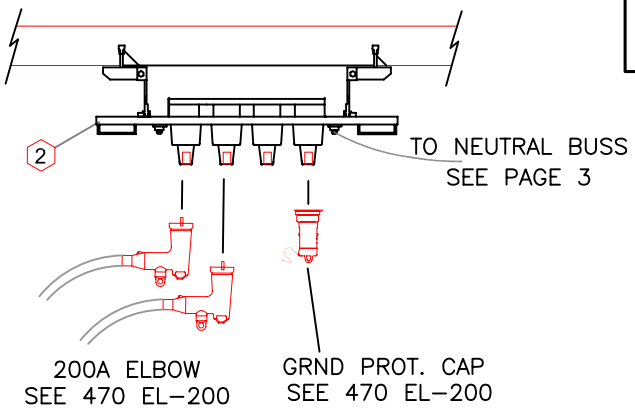

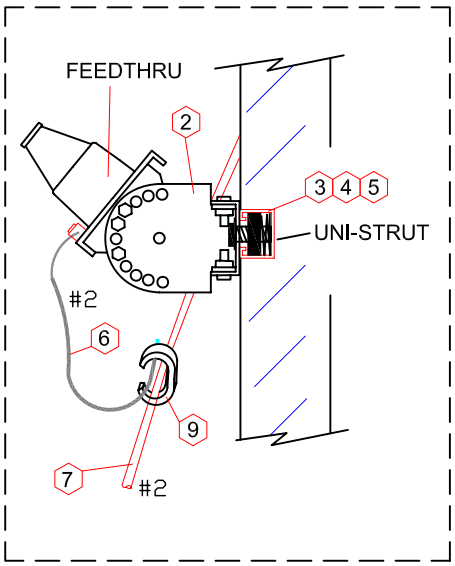

DETAIL A
FEEDTHRU GROUNDING

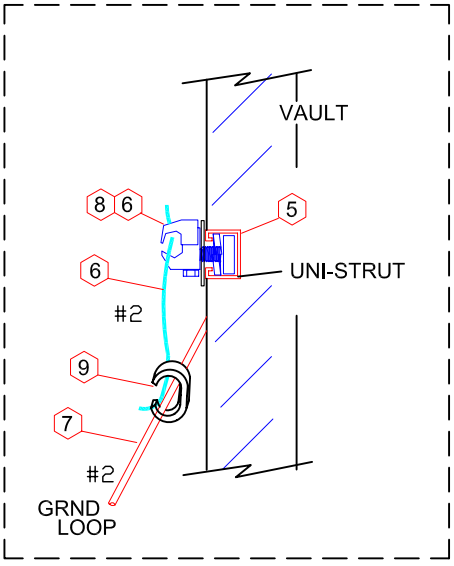

DETAIL B
GROUND LOOP TO VAULT

ITEM	DESCRIPTION	QUANTITY JV2-200	STOCK #
2	FEEDTHRU 4W - 15KV W/ BRKT	1	9400400
+2	FEEDTHRU 4W - 25KV W/ BRKT	1	9401500
4	xxx SS BOLT 1" x 1/2"	5	3131800
5	xxx UNISTRUT NUT 1/2"	5	3224000
6	xxx - SS WASHER 1/2" ROUND	5	333000
7	xxx 2 CU SD 7-STRAND	20FT	5080700
8	xxx GROUND CONNECTOR	3	6589900
9	xxx COPPER CRIMP	4	6060700

DATE: 08/20/04
REV: 11/01/06
DRAWN: DT
CHK: RA/DP
PG 2 OF 3
FILE: H:\ENGSTANDARDS\05 SPECBOOK\400-DIST_UG\430\JV3-200

GROUP: JUNCTION VAULT - 200AMP
DETAIL: FEED THRU & CABLE RACKING

VAULT SIZE: 48" x 48" x 48"

JV2-200

577-LA

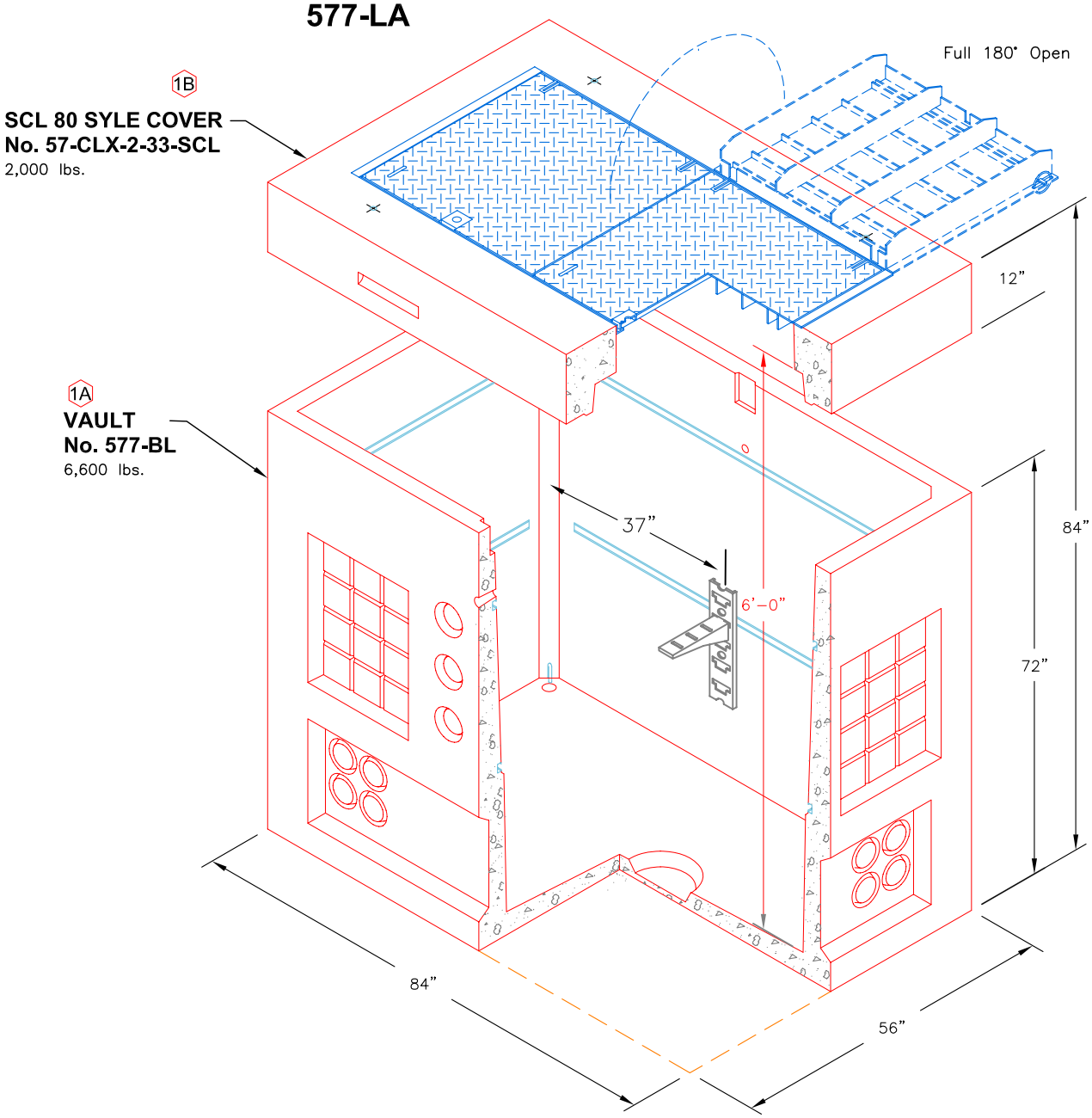

ITEM	DESCRIPTION	QUANTITY JV3-200	STOCK #
1A	VAULT 84" x 56" x 72" w/o COVER	1	9975500
1B	COVER 84" x 56" x 12" W/ STEEL DOORS	1	9975501

NOTES:

DATE: 08/20/04
REV: 5/24/2007
DRAWN: DT
CHK: RA/DP
PG 1 OF 3
FILE: H:\ENGSTANDARDS\05 SPECBOOK\400-DIST_UG\430\JV3-200

GROUP: JUNCTION VAULT - 200AMP
TYPE: TWO PIECE W/ STEEL LID

SIZE: 84" x 56" x 60"

JV3-200

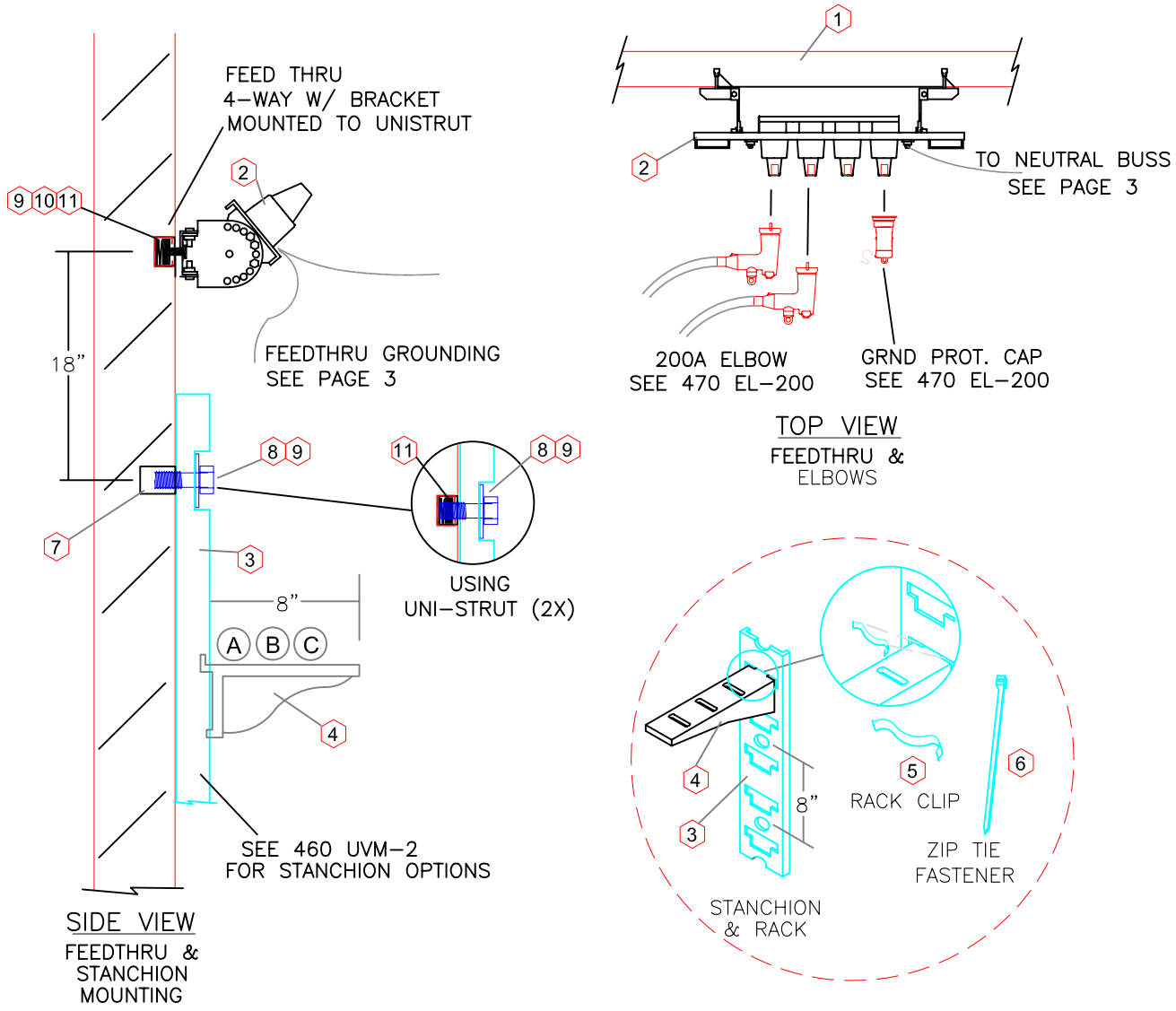

ITEM	DESCRIPTION	QUANTITY JV3-200	STOCK #
	FEED THRU & CABLE RACKING		
2	FEEDTHRU 4W 15KV W/BRKT	3	9400400
3	xxx - CABLE RACK 24" STANCHION	4	9976524
4	xxx - CABLE RACK ARM 8"	4	9976508
5	xxx - CABLE RACK ARM CLIPS	4	9976500
6	LARGE ZIP TIES 21"	AS REQ'D	AS REQ'D
7	XXX - CONCRETE ANCHOR 1/2"	4	9976505
8	XXX - SS BOLT 1-1/2" X 1/2"	12	3132400
9	XXX - SS WASHER - 1/2" ROUND	10	3330000
10	XXX - SS BOLT 3/4" x 1/2"	6	3131600
11	XXX - UNI STRUT NUT 1/2"	18	3224000

DATE: 08/20/04
REV: 5/24/2007
DRAWN: DT
CHK: RA/DP
PG 2 OF 3
FILE: H:\ENGSTANDARDS\05 SPECBOOK\400-DIST_UG\430\JV3-200

GROUP: JUNCTION VAULT - 200AMP
DETAIL: FEED THRU & CABLE RACKING

VAULT SIZE: 84" x 56" x 60"

JV3-200

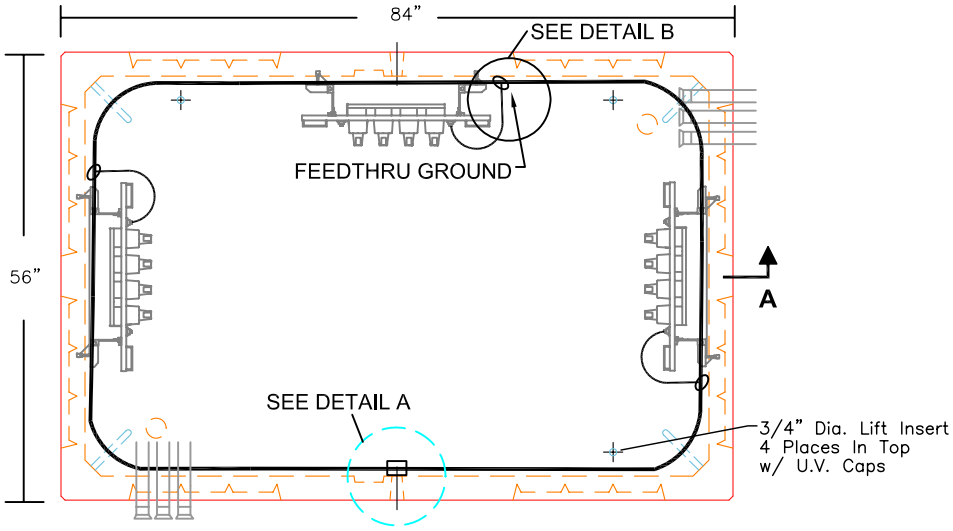

PLAN VIEW

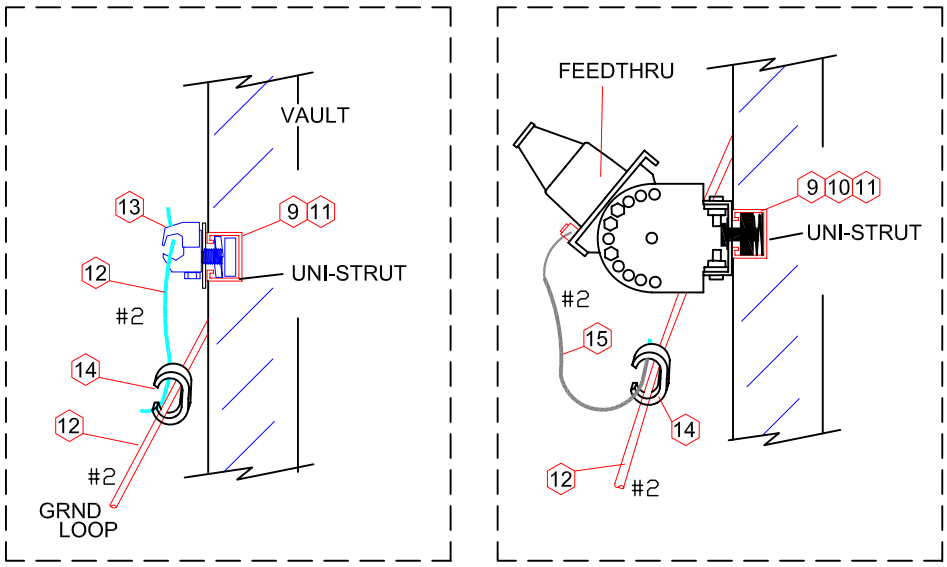

DETAIL A
GROUND LOOP TO VAULT

DETAIL B
FEEDTHRU GROUNDING

ITEM	DESCRIPTION	QNTY JV3-200	STOCK #
	GROUNDING		
9	xxx - SS WASHER - 1/2" ROUND	10	3330000
10	xxx - SS BOLT 3/4" x 1/2"	6	3131600
11	xxx - UNI STRUT NUT 1/2"	18	3224000
12	xxx - 2 CU SD 7-STRAND	30FT	5080700
13	xxx GROUND CONNECTOR	10	6589900
14	xxx COPPER CRIMP (2-2)	13	6060700

DATE: 08/20/04
REV: 5/24/2007
DRAWN: DT
CHK: RA/DP
PG 3 OF 3
FILE: H:\ENGSTANDARDS\05 SPECBOOK\400-DIST_UG\430\JV3-200

GROUP: JUNCTION VAULT - 200AMP
DETAIL: GROUNDING

VAULT SIZE: 84" x 56" x 60"

JV3-200

776-LA

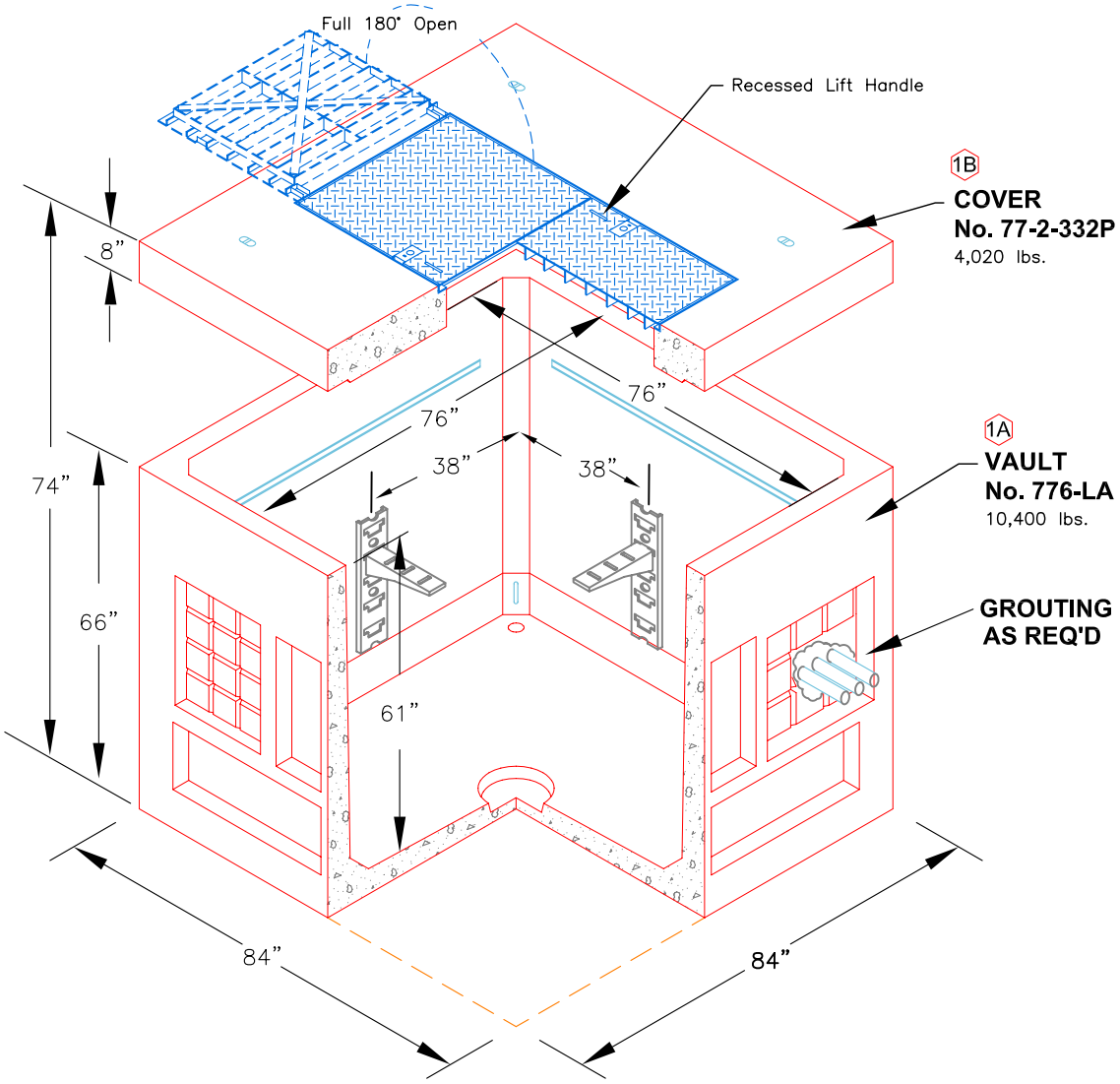

ITEM	DESCRIPTION	QUANTITY JV3-600	STOCK #
1A	VAULT 84" x 84" x 66" w/o COVER	1	9975600
1B	COVER 84" x 84" x 8" W/ STEEL DOORS	1	9975602

NOTES:

DATE: 08/20/04
REV: 5/24/2007
DRAWN: JK/DT
CHK: RA/DP
PG 1 OF 3
FILE: H:\ENGSTANDARDS\05 SPECBOOK\400-DIST_UG\430\JV3-600

GROUP: JUNCTION BOX - VAULT - 600AMP
TYPE: TWO PIECE W/ STEEL LID

SIZE: 84" x 84" x 66"

JV3-600

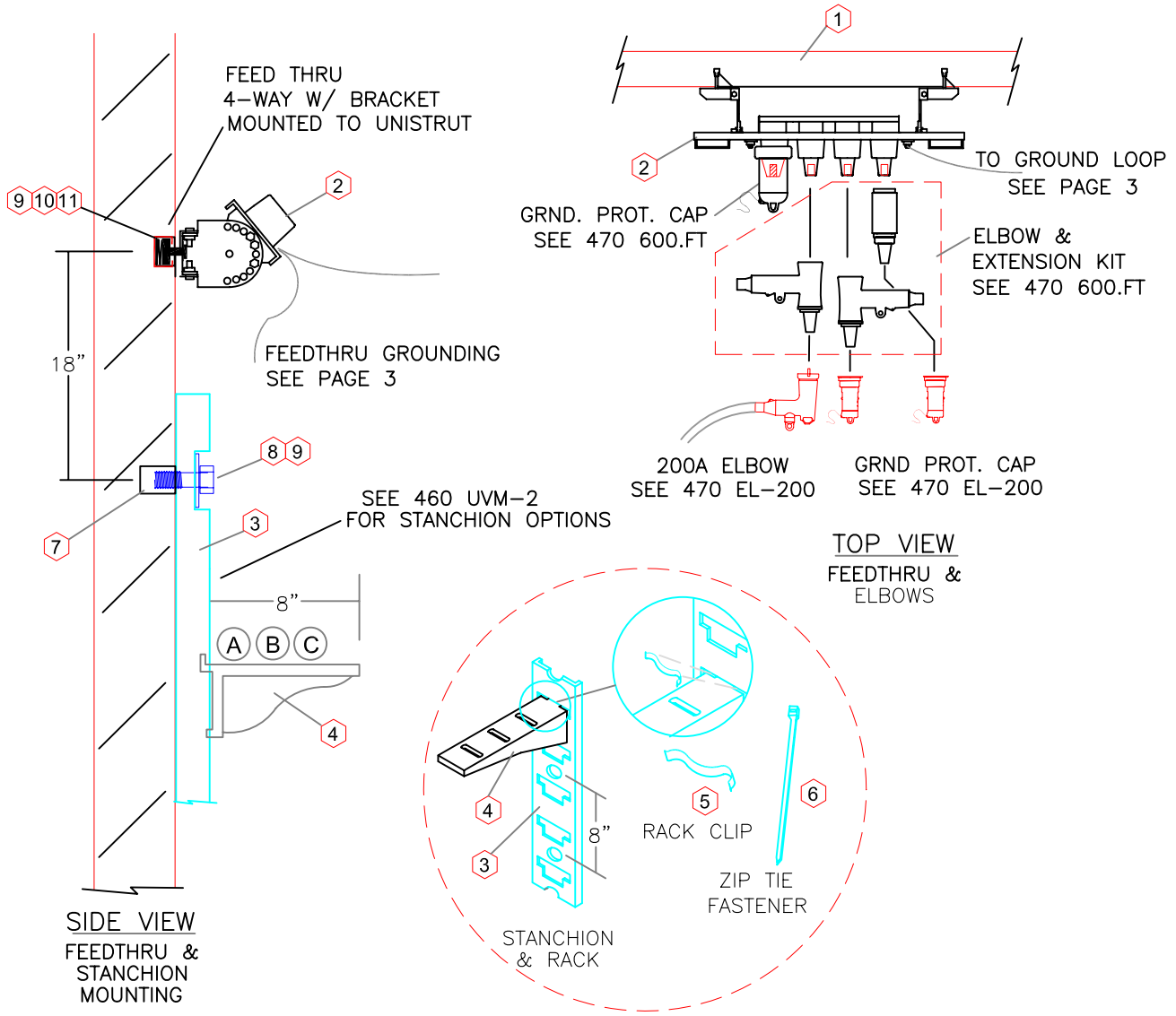

ITEM	DESCRIPTION	QUANTITY JV3-600	STOCK #
	FEED THRU & CABLE RACKING		
2	FEEDTHRU 4W 600A 15/ 25KV	3	9401800
3	xxx CABLE RACK 24" STANCHION	4	9976524
4	xxx CABLE RACK ARM 8"	4	9976508
5	xxx CABLE RACK ARM CLIPS	4	9976500
6	LARGE ZIP TIES 21"	AS REQ'D	AS REQ'D
7	XXX - CONCRETE ANCHOR 1/2"	8	9976505
8	XXX - SS BOLT 1-1/2" X 1/2"	8	3132400
9	XXX - SS WASHER - 1/2" ROUND	10	3330000
10	XXX - SS BOLT 3/4" x 1/2"	6	3131600
11	XXX - UNI STRUT NUT 1/2"	14	3224000

DATE: 08/20/04
REV: 5/24/2007
DRAWN: JK/DT
CHK: RA/DP
PG 2 OF 3
FILE: H:\ENGSTANDARDS\05 SPECBOOK\400-DIST_UG\430\JV3-600

GROUP: JUNCTION BOX - VAULT - 600AMP
DETAIL: FEED THRU & CABLE RACKING

VAULT SIZE: 84" x 84" x 66"

JV3-600

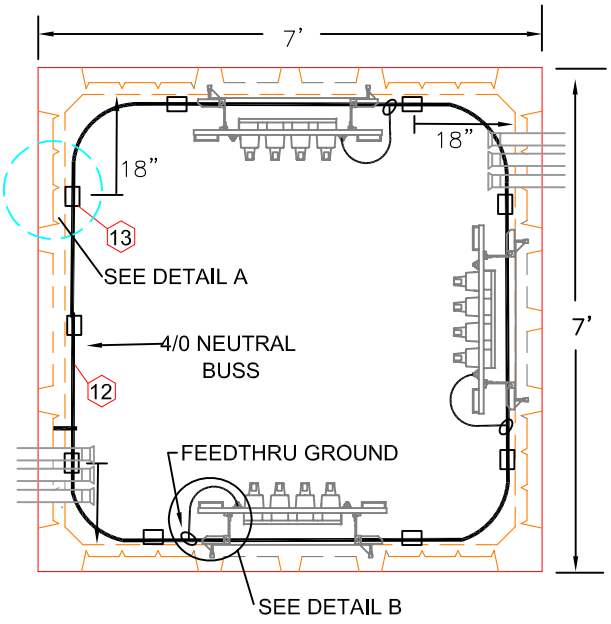

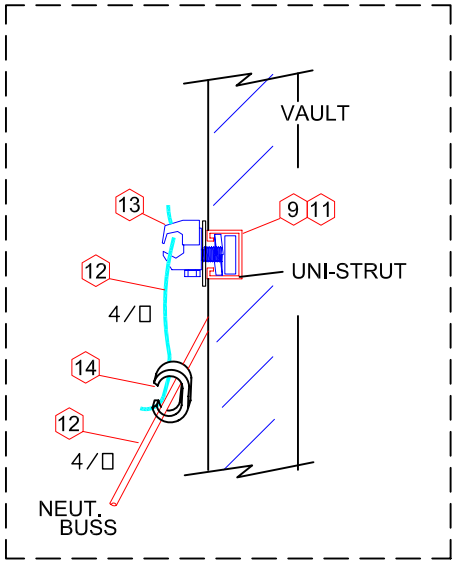

DETAIL A
NEUTRAL BUSS TO VAULT

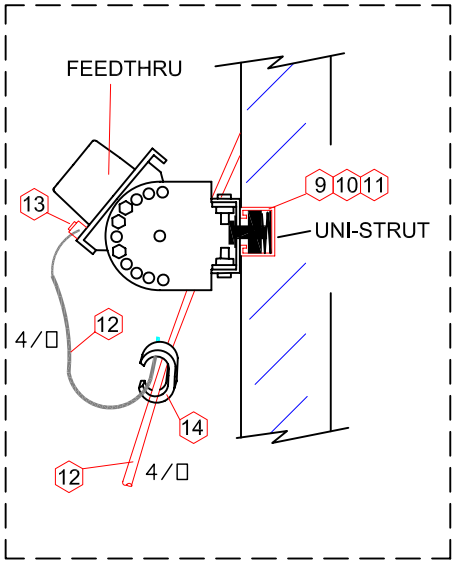

DETAIL B
FEEDTHRU GROUNDING

ITEM	DESCRIPTION	QUANTITY JV3-600	STOCK #
	GROUNDING		
9	XXX - SS WASHER - 1/2" ROUND	10	3330000
10	XXX - SS BOLT 3/4" x 1/2"	6	3131600
11	XXX - UNI STRUT NUT 1/2"	14	3224000
12	4/O COPPER S/D 19 STRAND	40'	5081400
13	xxx GROUND CONNECTOR 4/0	8	6589940
14	COPPER CRIMP (4/0-4/0)	14	6061400

DATE: 08/20/04
REV: 5/24/2007
DRAWN: JK/DT
CHK: RA/DP
PG 3 OF 3
FILE: H:\ENGSTANDARDS\05 SPECBOOK\400-DIST_UG\430\JV3-600

GROUP: JUNCTION BOX - VAULT - 600AMP
DETAIL: GROUNDING

VAULT SIZE: 84" x 84" x 66"

JV3-600

SPLICE VAULT

577-LA

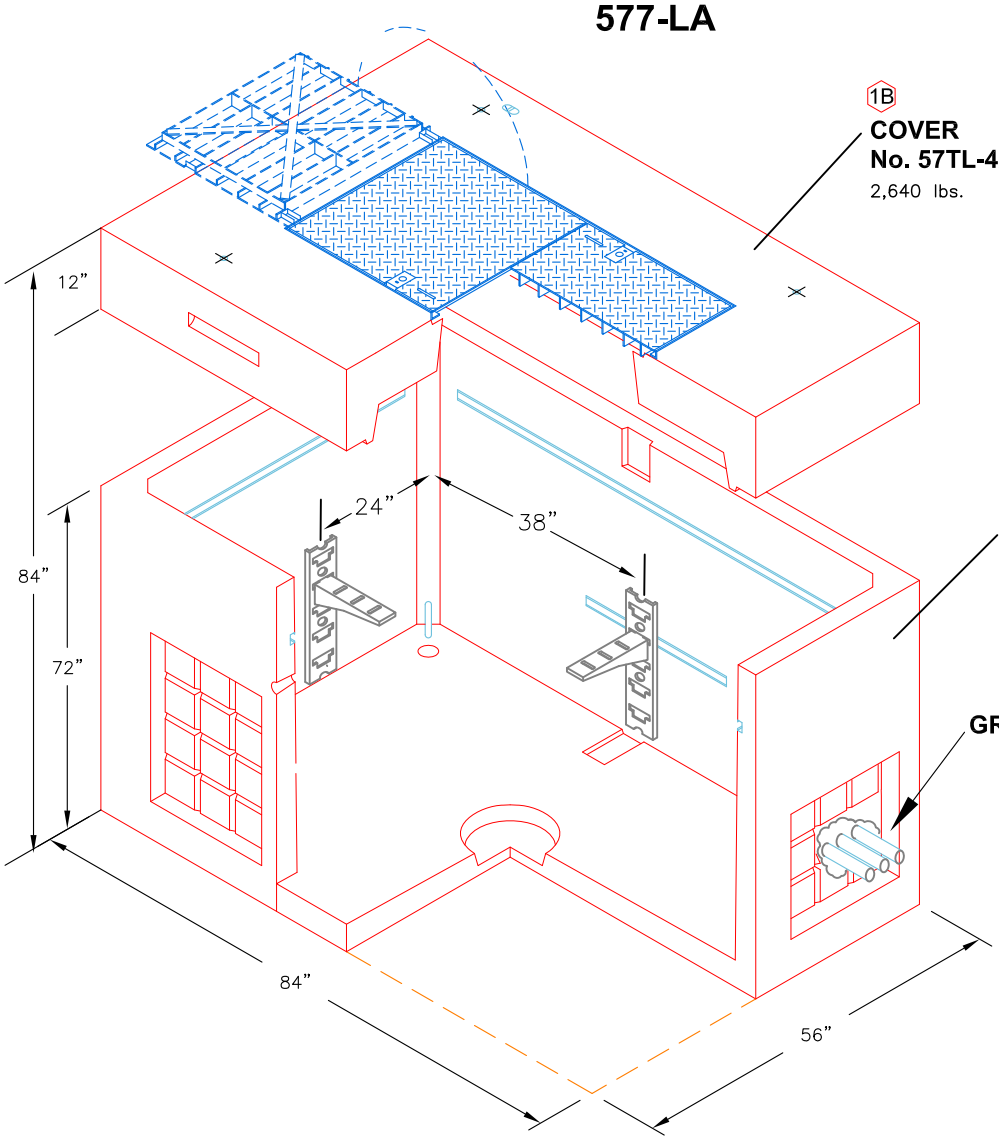

ITEM	DESCRIPTION	QUANTITY SPV-600	STOCK #
1A	VAULT 84" x 56" x 72" W/O COVER	1	9975500
1B	COVER 84" x 56" x 12" W/ STEEL DOORS	1	9975501

NOTES:

DATE: 08/20/04
REV: 5/24/2007
DRAWN: DT
CHK: RA/DP
FILE: H:\ENGSTANDARDS\05 SPECBOOK\400-DIST_UG\430\SPV

PD #1 of Chatham County

PG 1 OF 2

GROUP: SPLICE - VAULT
TYPE: TWO PIECE W/ STEEL LID

SIZE: 84" x 56" x 84"

SPV

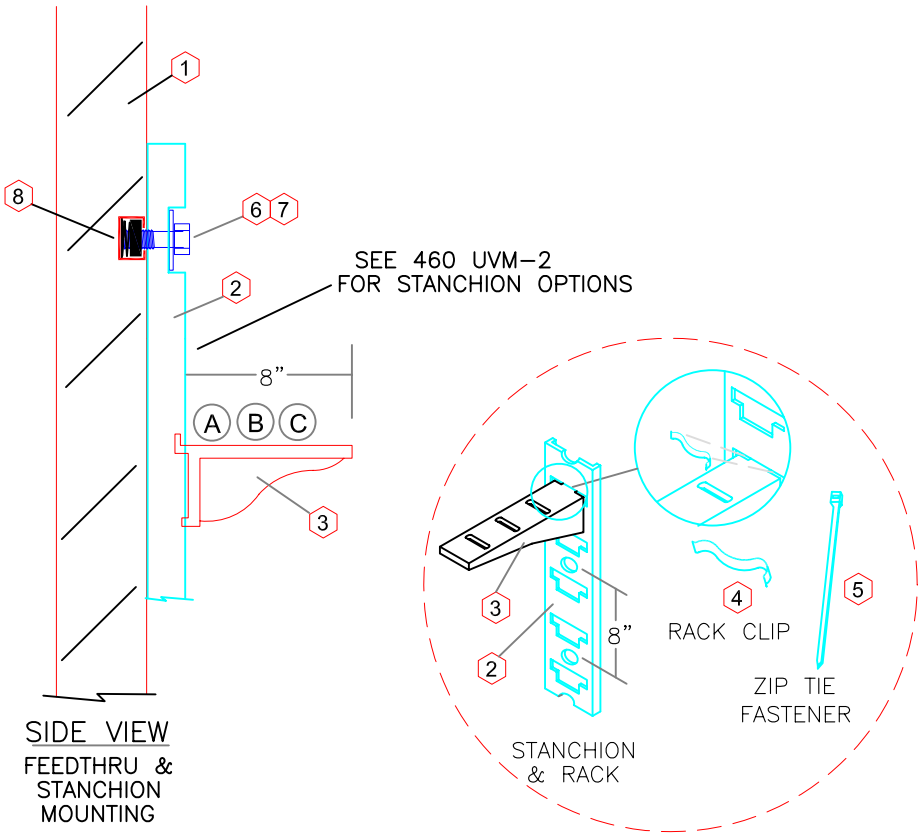

ITEM	DESCRIPTION	QUANTITY SPV	STOCK #
	SLICE VAULT		
1	VAULT 84x56x48 W/ STEEL LID	1	9975500
2	xxx CABLE RACK 24" STANCHION	4	9976524
3	xxx CABLE RACK ARM 8"	4	9976508
4	xxx CABLE RACK ARM CLIPS	4	9976500
5	LARGE ZIP TIES 21"	AS REQ'D	**AS REQ'D**
6	xxx - SS BOLT 1-1/2" X 1/2"	8	3132400
7	xxx - SS WASHER - 1/2" ROUND	8	3330000
8	xxx - UNI STRUT NUT 1/2"	8	3224000
9	SPLICE KIT AS REQ'D (SEE 1220 SPL)	AS REQ'D	**AS REQ'D**

SEE 1200: FOR SPLICE KITS

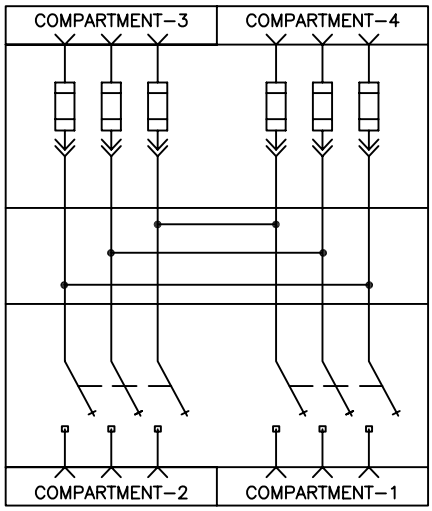

SGC-9
(PSI/II–9)

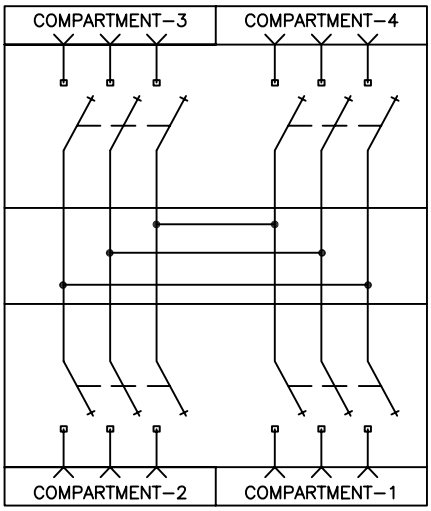

SGC-10
(PSI/II–10)

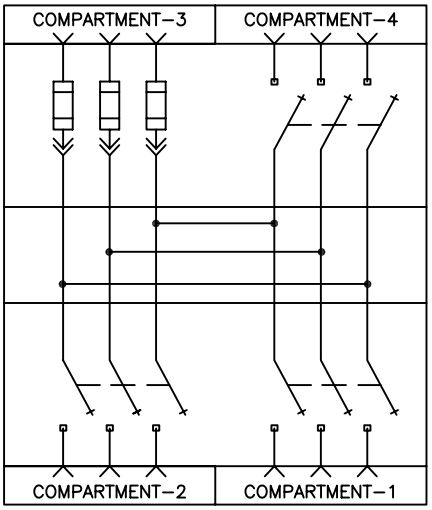

SGC-11
(PSI/II–11)

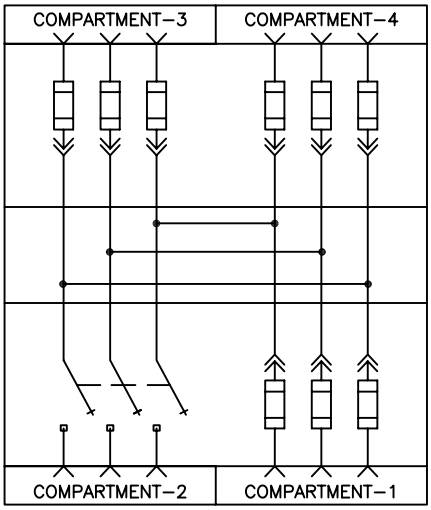

SGC-12
(PSI/II–12)

PADMOUNT LIVE FRONT	3-PH (600 AMP) SWITCH POSITIONS	3PH (200AMP) FUSED POSITIONS	STOCK #
SGC-9	**2**	**2**	9973409
SWITCHCABINET PSI/II-9			
SGC-10	**4**	**0**	9973410
SWITCHCABINET PSI/II-10			
SGC-11	**3**	**1**	9973411
SWITCHCABINET PSI/II-11			
SGC-12	**1**	**3**	9973412
SWITCHCABINET PSI/II-11			

SEE PAGE 2 FOR TERMINATION AND HARDWARE
SEE SGV-600 FOR VAULT SPECIFICATIONS

DATE: 08/20/04
REV: 5/24/2007
DRAWN: DT
CHK: RA/DP
FILE: H:\ENGSTANDARDS\05 SPECBOOK\400-UG\440-SG\SGC-600

PG 1 OF 2

GROUP: PADMOUNT SWITCHGEAR - 600AMP
TYPE: LIVE FRONT PSI/II - (15KV)

OPTIONS: SEE OPTIONS ABOVE

SGC-600

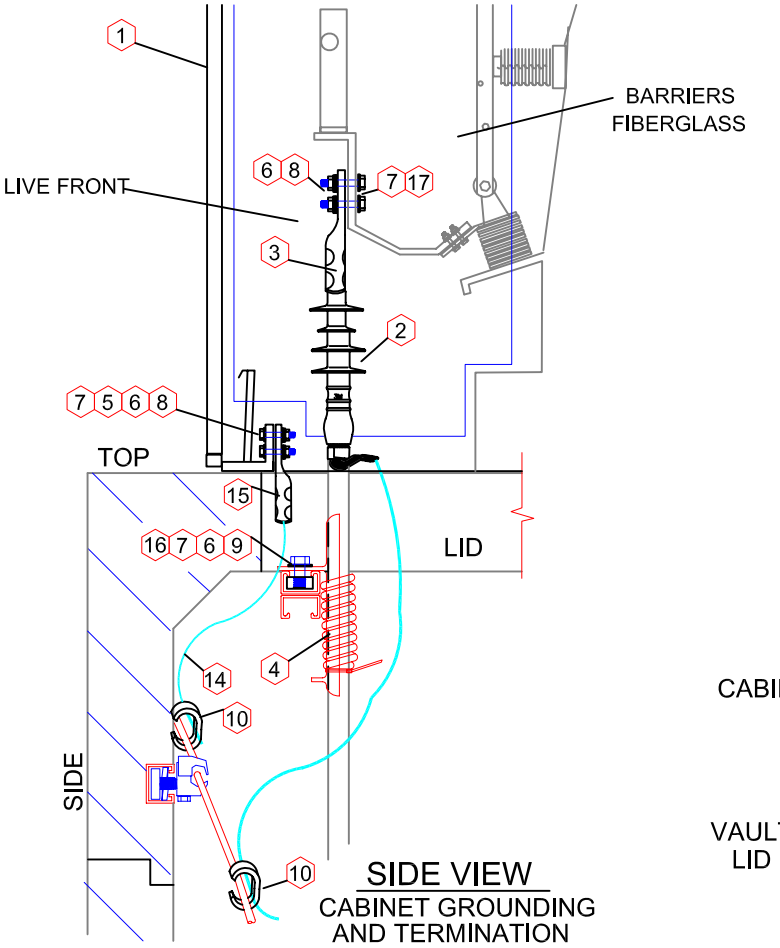

SIDE VIEW
CABINET GROUNDING
AND TERMINATION

SEE 440-SGV-600
FOR VAULT SPECIFICATIONS
GROUNDING AND CABLE RACKING

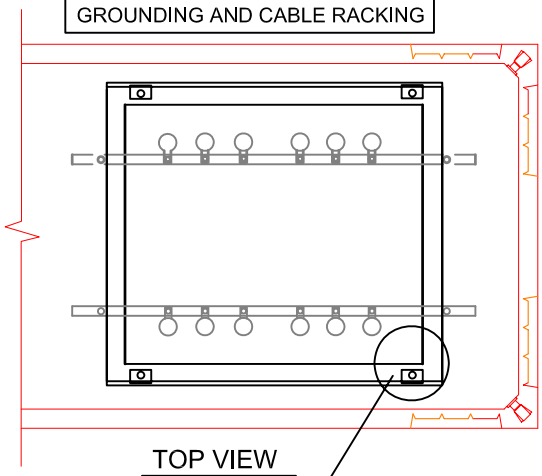

TOP VIEW
VAULT LID

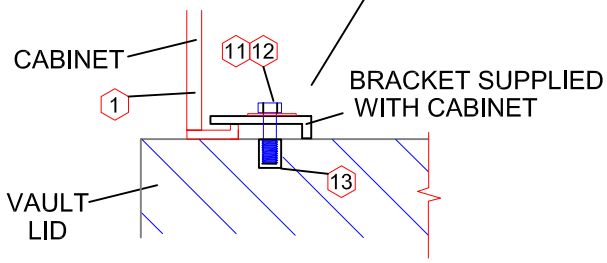

ITEM	DESCRIPTION	SWITCHGEAR CABINET 15/25KV				STOCK #
		SGC-9	SGC-10	SGC-11	SGC-12	
1	SWITCHCABINET PSI/II-9	1	~	~	~	9973409
"	SWITCHCABINET PSI/II-10	~	1	~	~	9973410
"	SWITCHCABINET PSI/II-11	~	~	1	~	9973411
"	SWITCHCABINET PSI/II-12	~	~	~	1	9973412
2	TERM 750 AL 15KV RUBBER	6	12	9	3	9324300
"	TERM VAULT 1/0 AL 15KV RUBBER	6	0	3	9	9321601
3	TERM LUG 750 AL 2H COMP	6	12	9	3	9324400
"	xxx - TERM 1/0 CU/ACC 2-H JUMP PAD	6	0	3	9	9321610
4	xxx - TERM ALUMAFORM MOUNT BRKT	12	12	12	12	9330800
5	xxx - SS BOLT 1-1/2" x 1/2"	4	4	4	4	3132400
6	xxx - SS BELLVILLE WASHER 1/2"	40	40	40	40	3330100
7	xxx - SS WASHER 1/2" ROUND	68	68	68	68	3330000
8	xxx - BRONZ NUT 1/2"	28	28	28	28	3228800
9	xxx - UNI-STRUT NUT 1/2"	12	12	12	12	3224000
10	xxx - COPPER CRIMP (SEE 510.CN)	14	14	14	14	AS REQ'D
11	xxx - BOLT MACH. 1-3/4" x 1/2"	4	4	4	4	3132800
12	xxx- ROUND WASHER 1/2"	4	4	4	4	3280800
13	xxx - CONCRETE ANCHOR 1/2"	4	4	4	4	9976505
14	4/0 COPPER S/D 19 STRAND	6FT	6FT	6FT	6FT	5081400
15	xxx - JUMP PAD 4/0 ACSR/CU 2H	2	2	2	2	6731800
16	xxx - SS BOLT 2-1/2" x 1/2"	24	24	24	24	3134000
17	xxx - SS BOLT 2-1/4" x 1/2"	12	12	12	12	3133600
18	FUSE & SW CAB END FIT	6	0	3	9	9973401
19	xxx FUSE 80K SWITCH & FUSE CAB	6	0	3	9	9973480
20	xxx FUSE TOOL SWITCH & FUSE CAB	1	1	1	1	9973499

GROUP: PADMOUNT SWITCHGEAR - 15KV
TYPE: LIVE FRONT PSI/II - (15KV)

OPTIONS: PER ENGINEERING SPECIFICATIONS

SGC-600

612-LA

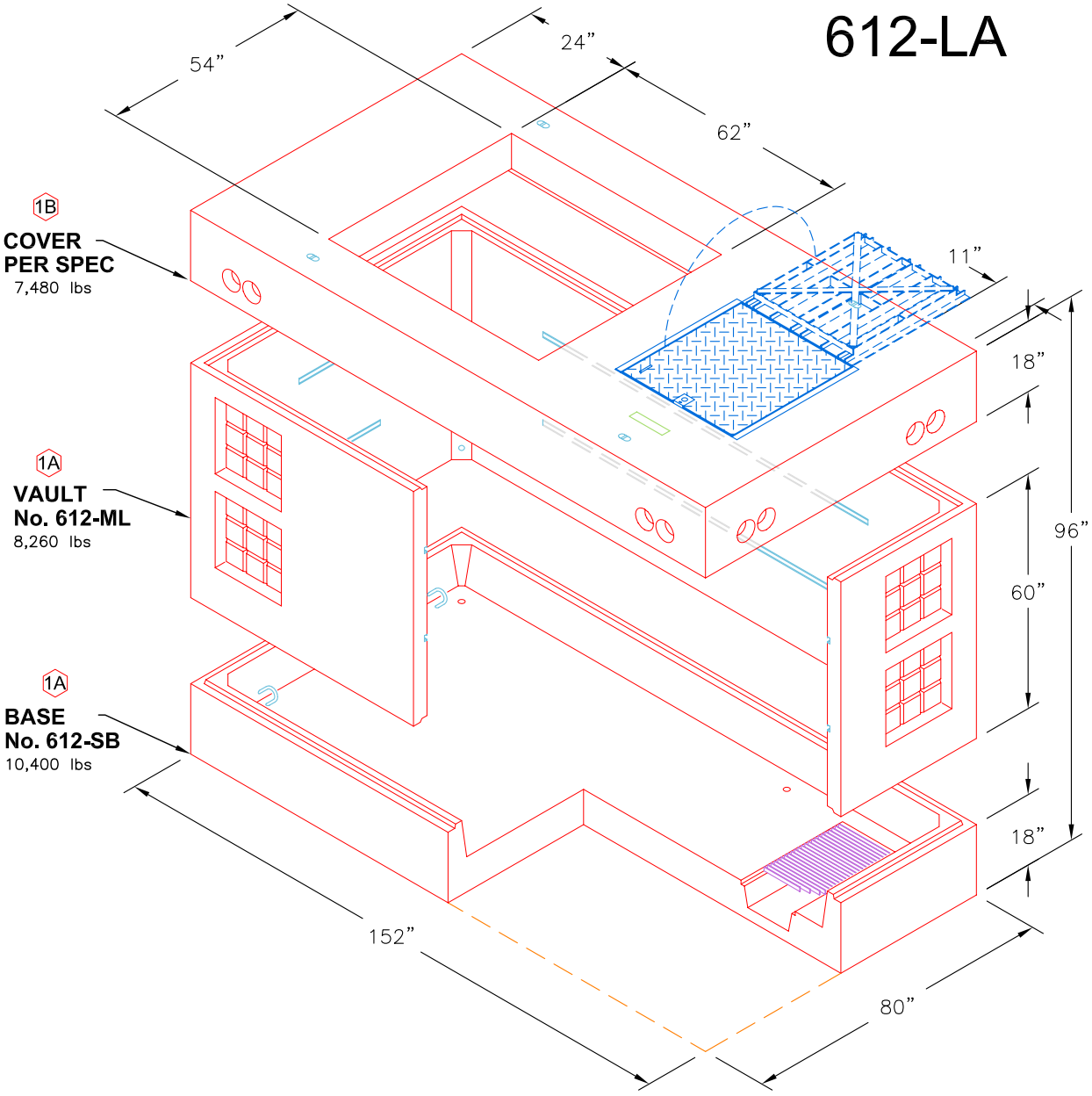

ITEM	DESCRIPTION	QNTY SGV-600	STOCK #
1A	VAULT 152x80x78 2PC W/O COVER	1	9975812
1B	COVER 152x80x18 W/STEEL DOOR	1	9975813

DATE: 08/20/04
REV: 5/24/2007
DRAWN: JK/DT
CHK: RA/DP
PG 1 OF 4
FILE: H:\ENGSTANDARDS\05 SPECBOOK\400-UG\440-SG\SCV-600

GROUP: SWITCHGEAR VAULT - 600AMP
TYPE: THREE PIECE - LOCKING STEEL COVER

DIMENSIONS: 152" x 80" x 96"

SGV-600

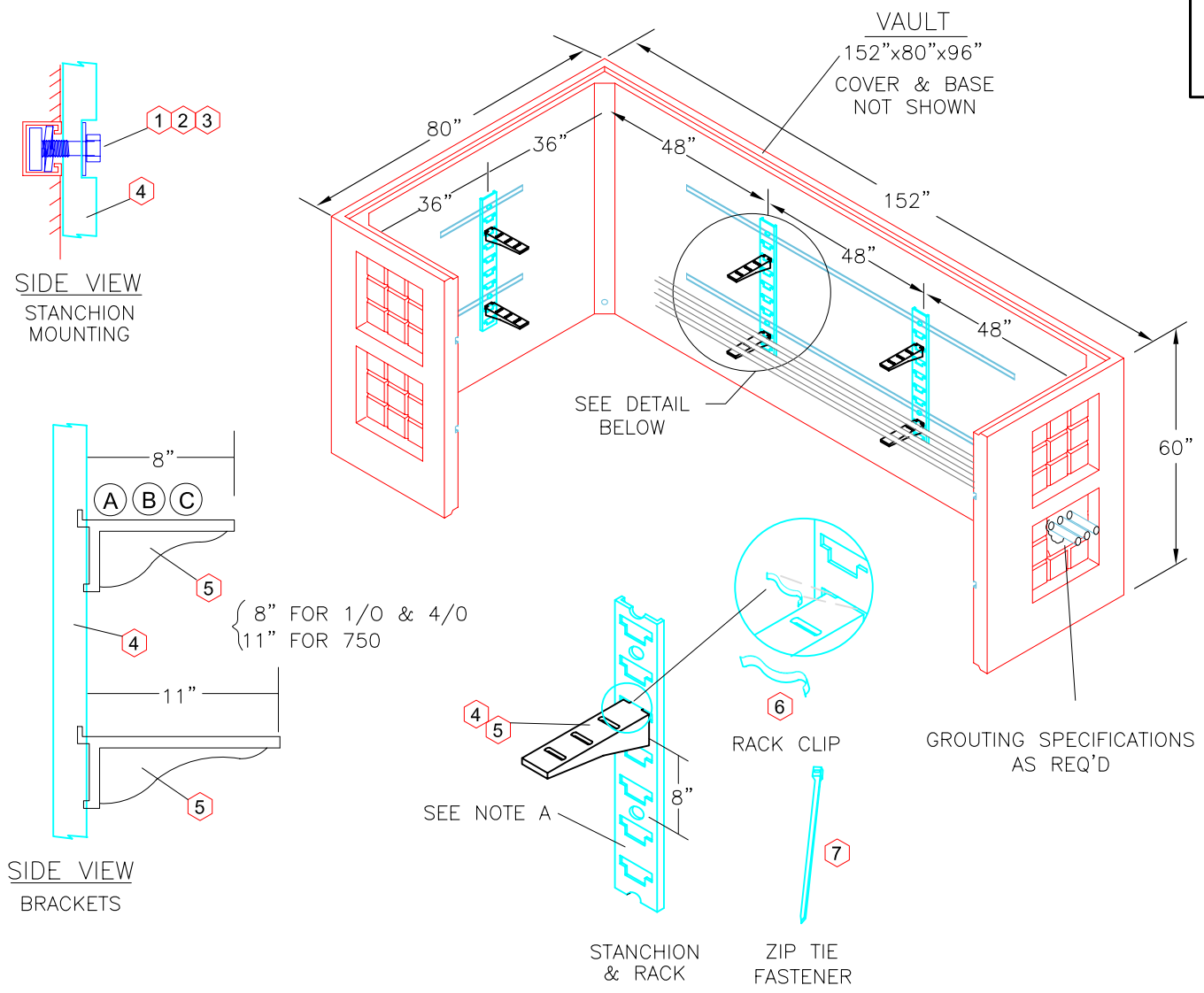

SEE 460.UVM–2
FOR STANCHION AND RACK OPTIONS

ITEM	DESCRIPTION	QUANTITY SGV-600	STOCK #
	CABLE RACKING		
1	xxx - SS BOLT - 1-1/2 X 1/2"	12	3132400
2	xxx - SS WASHER - 1/2" RND	12	3330000
3	xxx - UNI-STRUT NUT 1/2"	12	3224000
4	xxx - CABLE RACK 36" STANCHION	6	9976536
5	xxx - CABLE RACK ARM 11"	12	9976511
6	xxx - CABLE RACK ARM CLIPS	12	9976500
7	LARGE ZIP TIES 21"	AS REQ'D	AS REQ'D

NOTE A: THE 24" AND 36" STANCHIONS MAY BE USED TOGETHER TO ENABLE INCREASING THE OVERALL LENGTH OF THE RACK TO 60".

DATE: 08/20/04
REV: 5/24/2007
DRAWN: JK/DT
CHK: RA/DP
PG 2 OF 4
FILE: H:\ENGSTANDARDS\05 SPECBOOK\400-UG\440-SG\SCV-600

GROUP: SWITCHGEAR VAULT - 600AMP
DETAIL: CABLE RACKING

OPTIONS: PER ENGINEERING SPECIFICATIONS

SGV-600

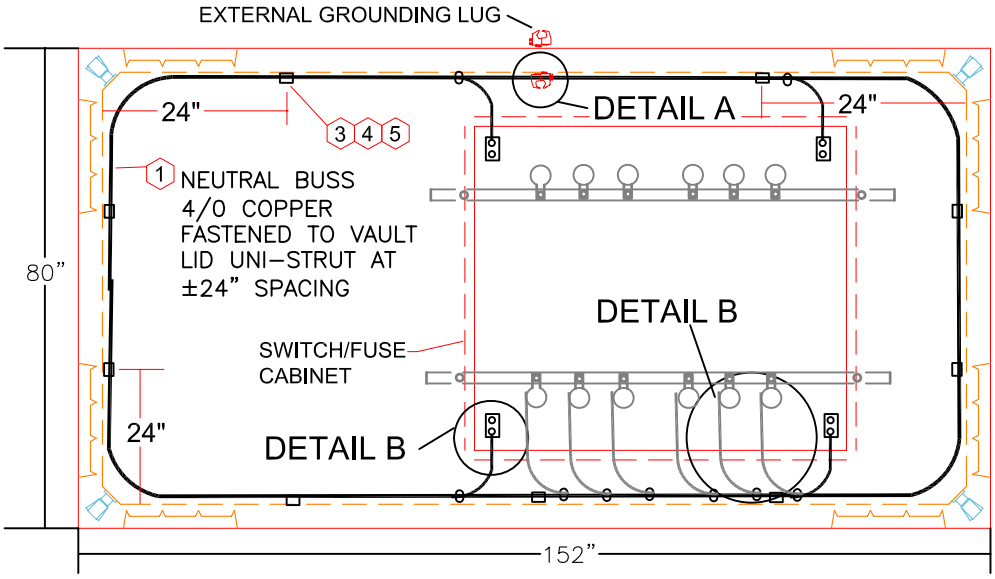

SEE SGC-600

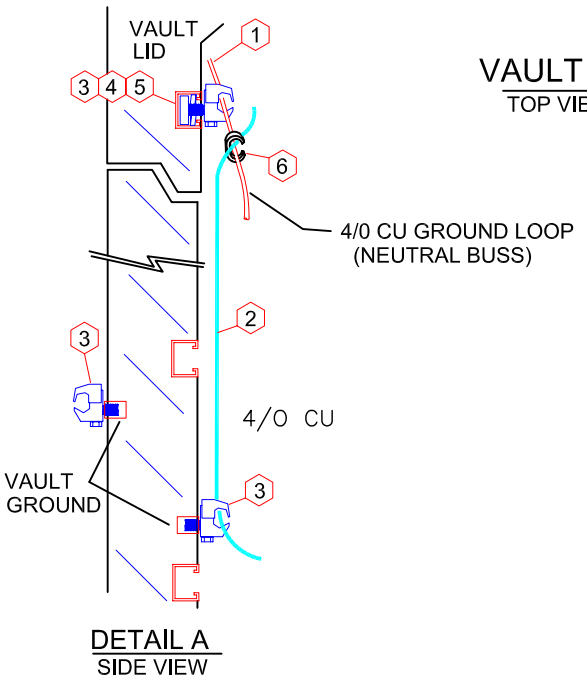

VAULT LID
TOP VIEW

DETAIL A
SIDE VIEW

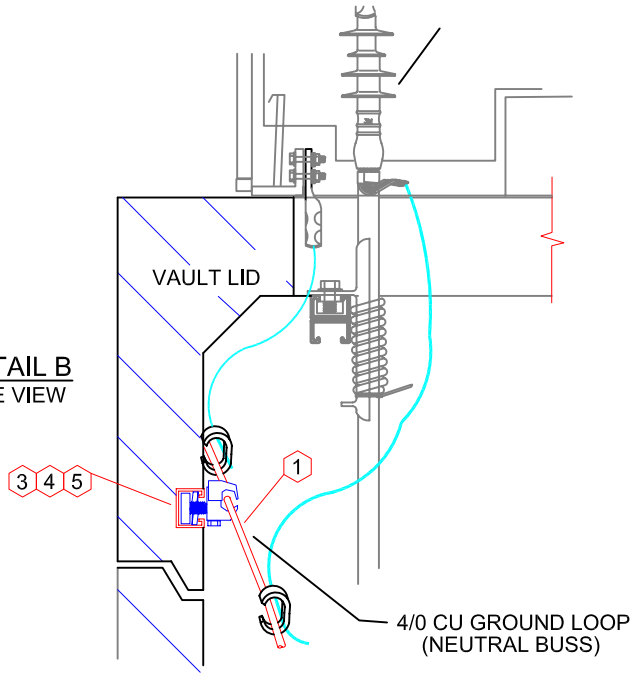

ITEM	DESCRIPTION	QUANTITY SGV-600	STOCK #
	GROUNDING		
1	xxx 4/O COPPER S/D 19 STRAND "NEUT. BUSS"	45FT	5081400
2	xxx 4/O COPPER S/D 19 STRAND	8FT	5081400
3	xxx 4/0 GROUNDING LUG	14	6589940
4	xxx - UNI-STRUT NUT 1/2"	10	3224000
5	xxx - WASHER 1/2" ROUND	12	3280800
6	xxx- CRIMPIT 4/0-4/0	AS REQ'D	6061400

DATE: 08/20/04
REV: 5/24/2007
DRAWN: JK/DT
CHK: RA/DP
PG 3 OF 4
FILE: H:\ENGSTANDARDS\05 SPECBOOK\400-UG\440-SG\SCV-600

GROUP: SWITCHGEAR VAULT - 600AMP
DETAIL: GROUNDING

OPTIONS: PER ENGINEERING SPECIFICATIONS

SGV-600

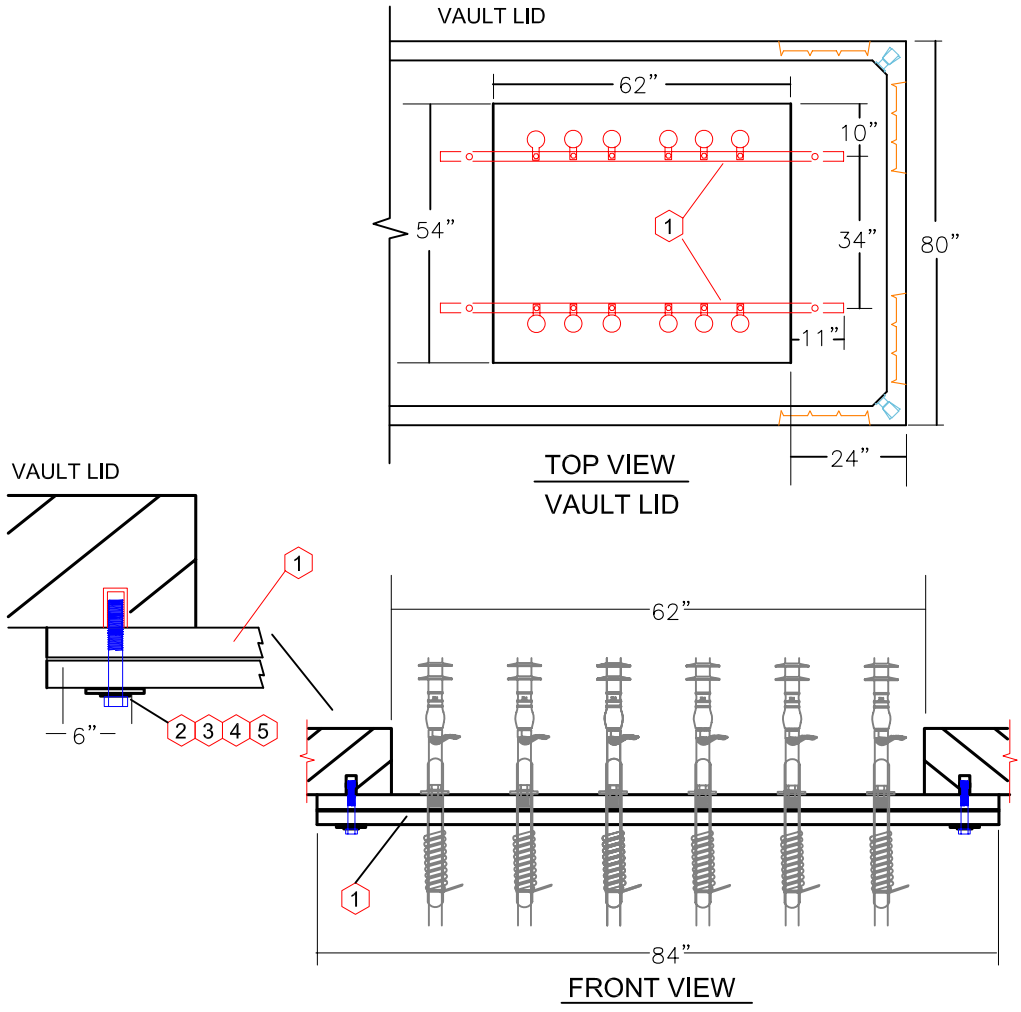

ITEM	DESCRIPTION	QUANTITY SGV-600	STOCK #
	TERMINATION MOUNTING BRKT		
1	xxx - UNI-STRUT 84" GALV	2	8995800
2	xxx - SS BOLT - 1-3/4 X 1/2	4	3132800
3	xxx - WASHER - sq-2 1/4	4	3292000
4	xxx - SS WASHER - 1/2" RND	4	3330000
5	xxx - CONCRETE ANCHOR	4	9976505

DATE: 08/20/04
REV: 5/24/2007
DRAWN: JK/DT
CHK: RA/DP
PG 4 OF 4
FILE: H:\ENGSTANDARDS\05 SPECBOOK\400-UG\440-SG\SCV-600

GROUP: SWITCHGEAR VAULT - 600AMP
DETAIL: TERMINATION MOUNTING

OPTIONS: PER ENGINEERING SPECIFICATIONS

SGV-600

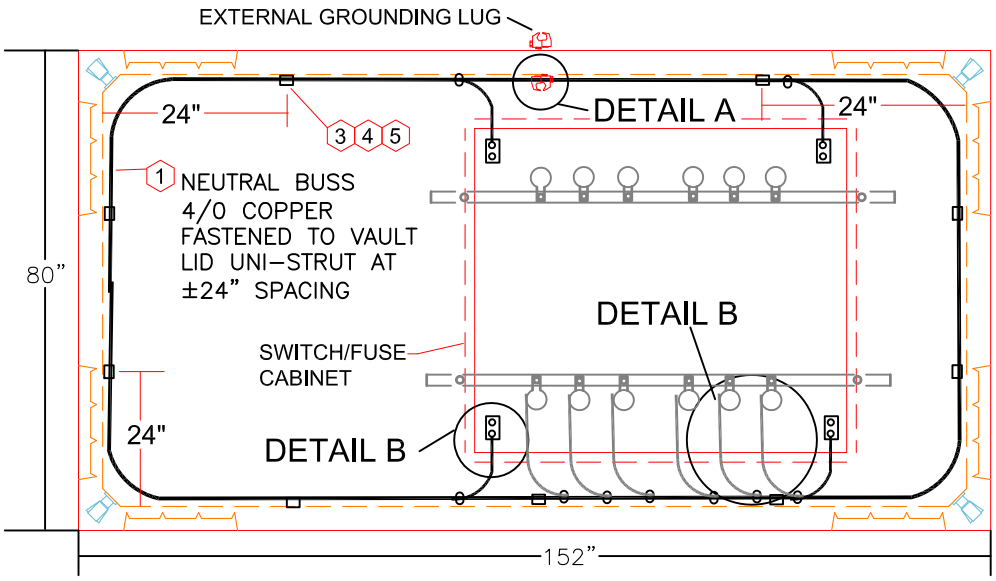

SEE SGC-600

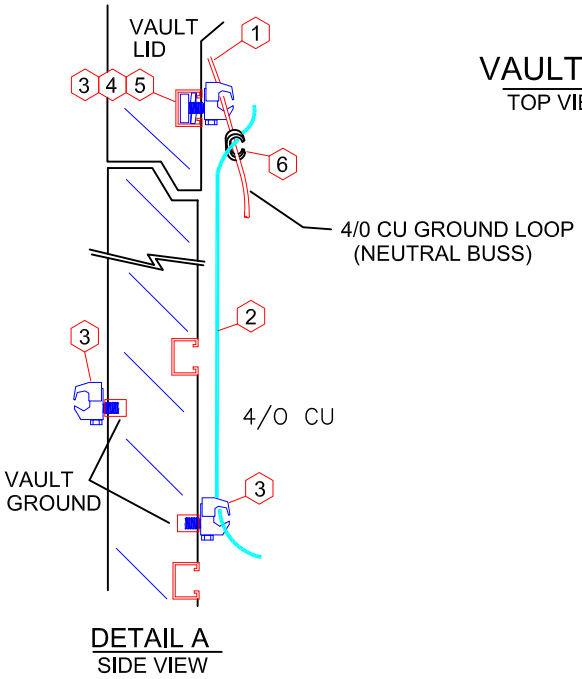

VAULT LID
TOP VIEW

DETAIL A
SIDE VIEW

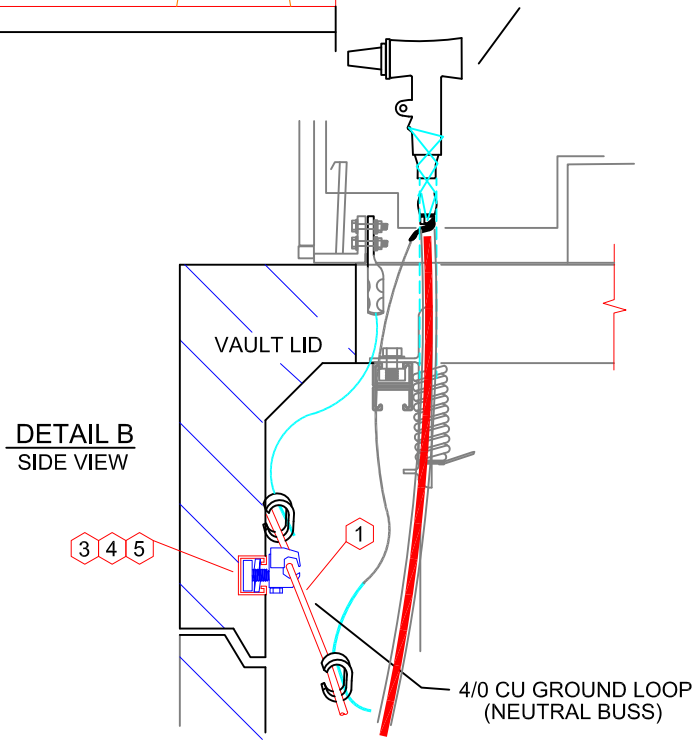

ITEM	DESCRIPTION	QUANTITY SGV-600	STOCK #
	GROUNDING		
1	xxx 4/O COPPER S/D 19 STRAND "NEUT. BUSS"	45FT	5081400
2	xxx 4/O COPPER S/D 19 STRAND	8FT	5081400
3	xxx 4/0 GROUNDING LUG	14	6589940
4	xxx - UNI-STRUT NUT 1/2"	10	3224000
5	xxx - WASHER 1/2" ROUND	12	3280800
6	xxx- CRIMPIT 4/0-4/0	AS REQ'D	6061400

DATE: 08/20/04
REV: 5/24/2007
DRAWN: JK/DT
CHK: RA/DP
PG 3 OF 4
FILE: H:\ENGSTANDARDS\05 SPECBOOK\400-UG\440-SG\SCV-600

GROUP: SWITCHGEAR VAULT - 600AMP
DETAIL: GROUNDING

OPTIONS: PER ENGINEERING SPECIFICATIONS

SGDFV-600

SWITCH CABINET & VAULT

DATE: 08/20/04
REV: 02/06/05
DRAWN: JK/DT
CHK: RA/DP
FILE: H:\ENGSTANDARDS\05 SPECBOOK\400-UG\440-SWC

PD #1 of Gladstone County

PG 1
OF 1

GROUP: PADMOUNT SWITCHGEAR - 15KV
TYPE: LIVE FRONT PSI/II - (15KV)

OPTIONS: PER ENGINEERING SPECIFICATIONS

SGC-600

UNI-STRUT - TERMINATION

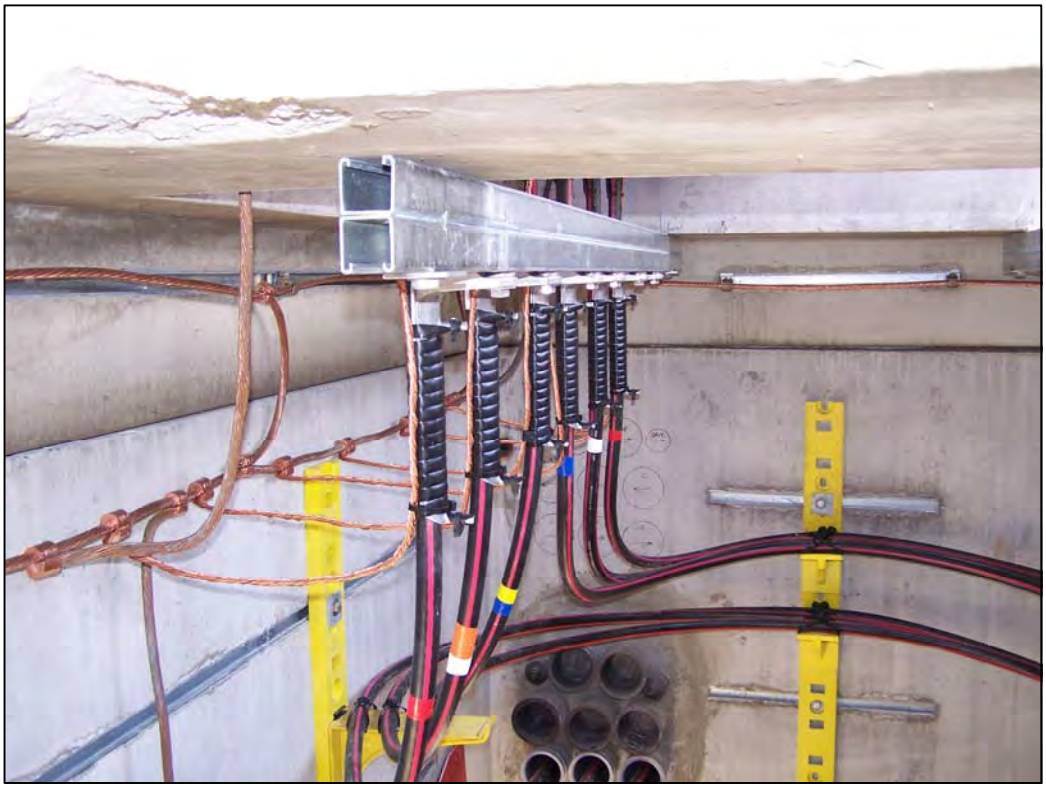

DATE: 08/20/04
REV: 02/06/05
DRAWN: JK/DT
CHK: RA/DP
FILE: H:\ENGSTANDARDS\05 SPECBOOK\400-UG\440-SWC

PG 1
OF 1

GROUP: PADMOUNT SWITCHGEAR - 15KV
TYPE: LIVE FRONT PSI/II - (15KV)

OPTIONS: PER ENGINEERING SPECIFICATIONS

SGC-600

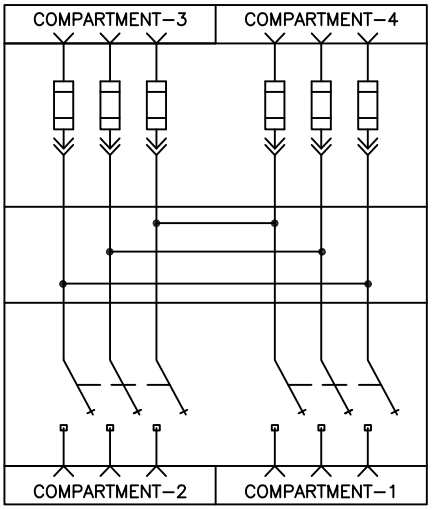

SGDF-9
(AIS–9)

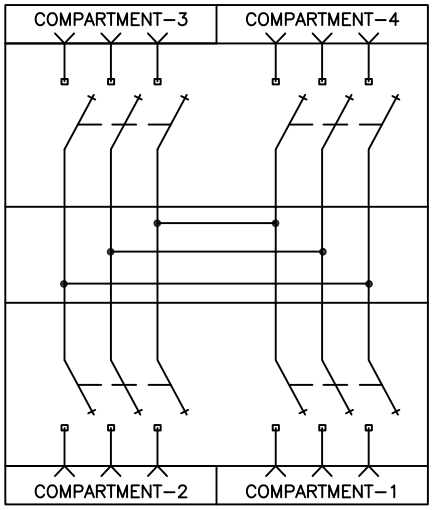

SGDF-10
(AIS–10)

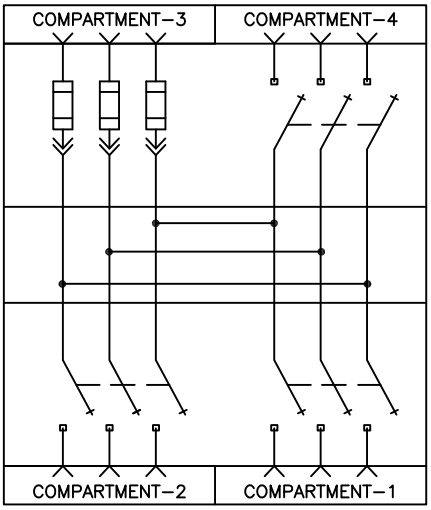

SGDF-11
(AIS–11)

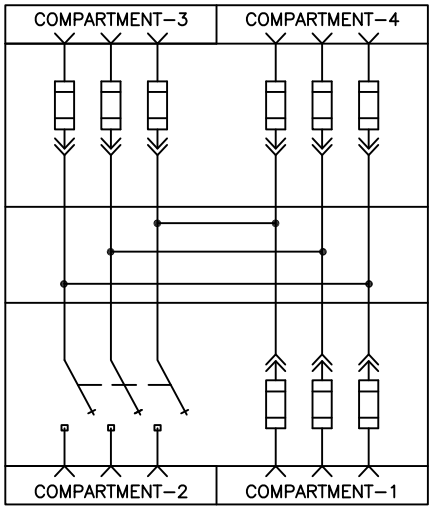

SGDF-12
(AIS–12)

PADMOUNT LIVE FRONT	3-PH (600 AMP) SWITCH POSITIONS	3PH (200AMP) FUSED POSITIONS	STOCK #
SGDF-9	**2**	**2**	9973409
SWITCHCABINET PSE/PME-9			
SGDF-10	**4**	**0**	99734XX
SWITCHCABINET PSE/PME-10			
SGDF-11	**3**	**1**	9973411
SWITCHCABINET PSE/PME-11			
SGDF-12	**1**	**3**	99734XX
SWITCHCABINET PSE/PME-12			

SEE PAGE 2 FOR TERMINATION AND HARDWARE
SEE SGV-600 FOR VAULT SPECIFICATIONS

DATE: 10/20/09
REV: 08/20/10
DRAWN: DT
CHK: RA/DP
PG 1 OF 2
FILE: H:\ENGSTANDARDS\05 SPECBOOK\400-UG\440-SG\SGDF-600

GROUP: PADMOUNT SWITCHGEAR - 600AMP
TYPE: DEAD FRONT AIS - (15KV)

OPTIONS: SEE OPTIONS ABOVE

SGDF-600

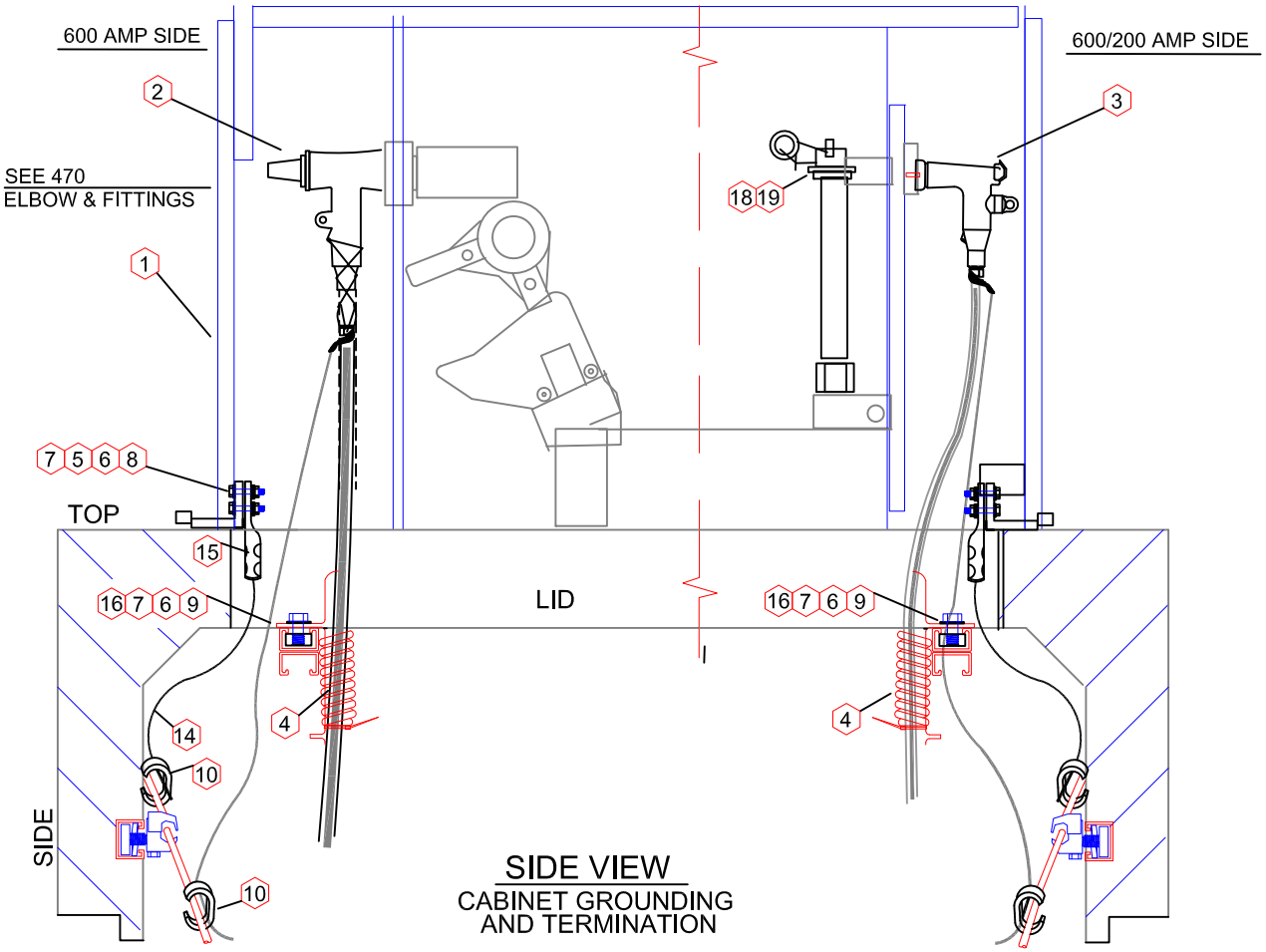

SIDE VIEW
CABINET GROUNDING
AND TERMINATION

ITEM	DESCRIPTION	SWITCHGEAR CABINET 15/25KV				STOCK #
		SGDF-9	SGDF-10	SGDF-11	SGDF-12	
1	SWITCHCABINET PSE/PME-09	1	~	~	~	9973409
"	SWITCHCABINET PSE/PME-10	~	1	~	~	*Not Stock item*
"	SWITCHCABINET PSE/PME-11	~	~	1	~	9973411
"	SWITCHCABINET PSE/PME-12	~	~	1	~	*Not Stock item*
2	TOP 2 750 AL 600A ELBOW KIT	6	12	9	3	**AS REQ'D**
3	ELBOW 200AMP	6	0	3	9	**AS REQ'D**
4	xxx - TERM ALUMAFORM MOUNT BRKT	24FT	24FT	24FT	24FT	9330800
5	xxx - SS BOLT 1-1/2" x 1/2"	4	4	4	4	3132400
6	xxx - SS BELLVILLE WASHER 1/2"	28	28	28	28	330100
7	xxx - SS WASHER 1/2" ROUND	44	44	44	44	3330000
8	xxx - BRONZ NUT 1/2"	16	16	16	16	3228800
9	xxx - UNI-STRUT NUT 1/2"	12	12	12	12	3224000
10	xxx - COPPER CRIMP (SEE 510.CN)	14	14	14	14	**AS REQ'D**
11	xxx - BOLT MACH. 1-3/4" x 1/2"	4	4	4	4	3132800
12	xxx- ROUND WASHER 1/2"	4	4	4	4	3280800
13	xxx - CONCRETE ANCHOR 1/2"	4	4	4	4	9976505
14	4/0 COPPER S/D 19 STRAND	6FT	6FT	6FT	6FT	5081400
15	xxx - JUMP PAD 4/0 ACSR/CU 2H	2	2	2	2	6731800
16	xxx - SS BOLT 2-1/2" x 1/2"	24	24	24	24	3134000
17	xxx - SS BOLT 2-1/4" x 1/2"	12	12	12	12	3133600
18	FUSE & SW CAB END FIT	6	0	3	9	9973401
19	xxx FUSE SWITCH & FUSE CAB	6	0	3	9	**AS REQ'D**
20	xxx FUSE TOOL SWITCH & FUSE CAB	1	1	1	1	9973499

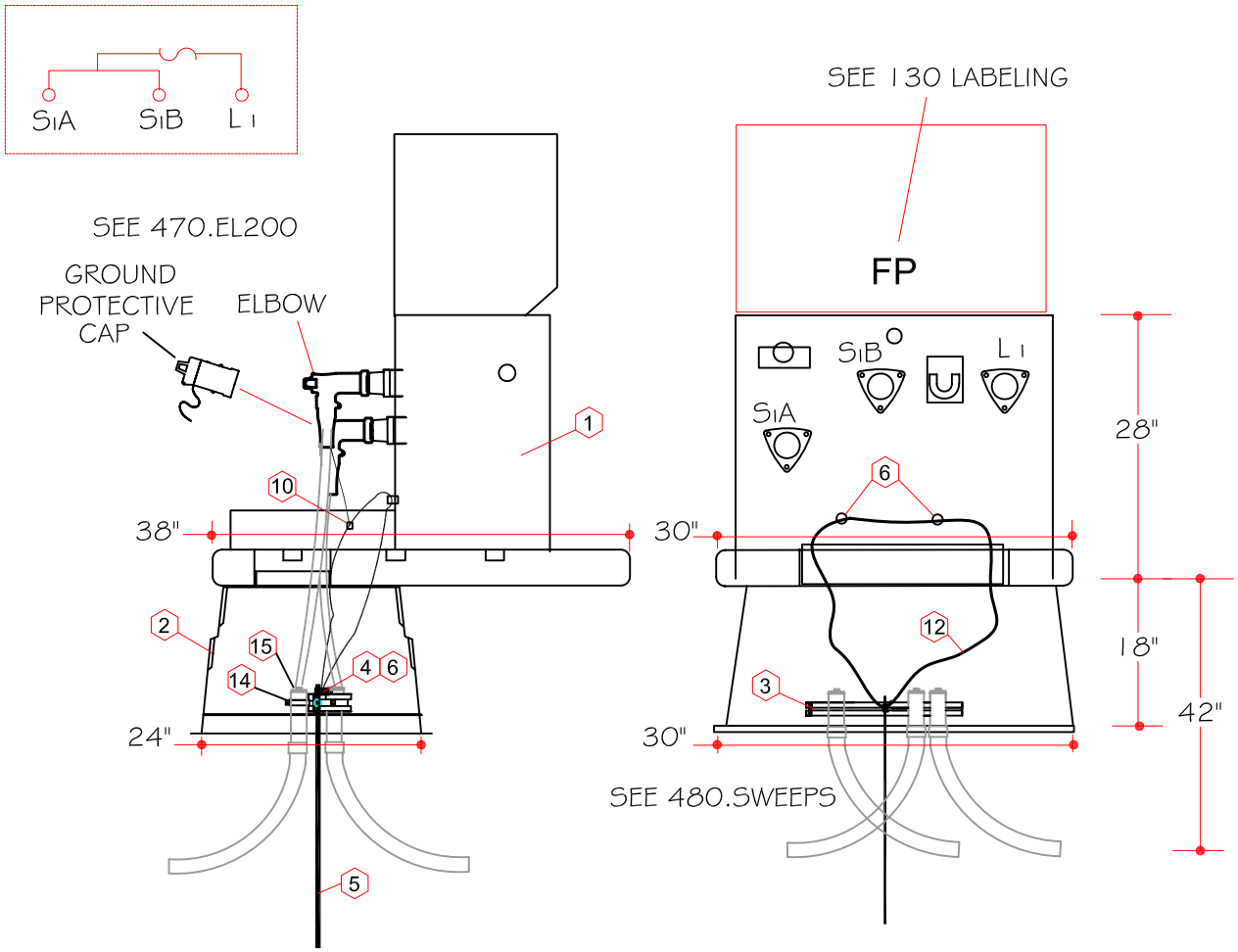

(NOTE: USE A PLUS SIGN BEFORE THE ASSEMBLY NUMBER FOR 25KV APPLICATIONS, +FP1-L, ETC....)

ITEM	DESCRIPTION	LOOP FP1-L	RADIAL FP1-R	STOCK #
1	FUSE PAD MT 8KV 65A	1	1	9973000
2	TRANSFORMER SCOOP	1	1	9974100
3	xxx UNI-STRUT 24" GALV	1	1	8995500
4	xxx CLAMP 5/8 GRND ROD CINCH	1	1	8995000
5	xxx GROUND ROD 8' x 5/8" CU	1	1	3420800
6	xxx GROUND ROD CLAMP 5/8" BRNZ	1	1	6663900
7	xxx GROUNDING CONNECTOR	2	2	6589900
8	ELBOW 1/0 LB AL 15KV	3	2	9300500
+8	ELBOW 1/0 LB AL 25KV	3	2	9301500
9	xxx GRND PROTECT CAP 15KV	0	1	9410500
+9	xxx GRND PROTECT CAP 25KV	0	1	9410600
10	xxx CRIMPET 2-2	3	2	6060700
11	xxx TRANSFORMER LOCK	1	1	9979900
12	xxx 2 CU SD 7-STRAND	10FT	10FT	5080700
13	xxx FUSE (SEE 800	1	1	**AS REQ'D**
14	xxx CLAMP 2-PIECE 2" STANDOFF	3	2	8955520
15	xxx MULTI CAP - 2"	3	2	9060200

DATE: 08/20/04
REV: 5/24/2007
DRAWN: JK/DT
CHK: RA/DP
PG 1 OF 1
FILE: H:\ENGSTANDARDS\05 SPECBOOK\400-DISTR_UG\450-\FP1 SET

GROUP: FUSE CABINETS - PADMOUNTS & VAULTS
TYPE: SINGLE PHASE - FUSE CABINET -PADMOUNT

OPTIONS:		
	1/0 - Loop Feed Installation	**FP1-L**
	1/0 - Radial Feed Installation	**FP1-R**

1Ø FUSE CABINET - 200A

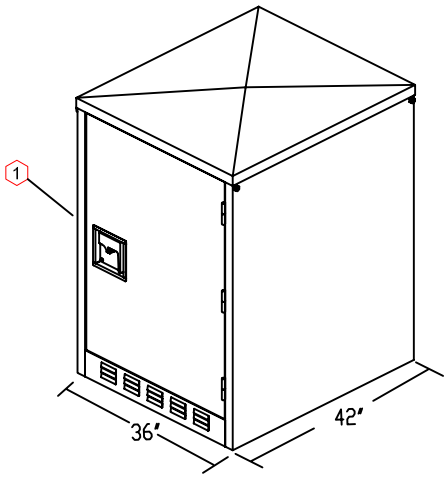

LINE DIAGRAM

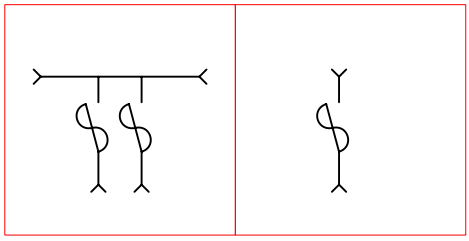

FC1-200L (1A) FC1-200R (1B)

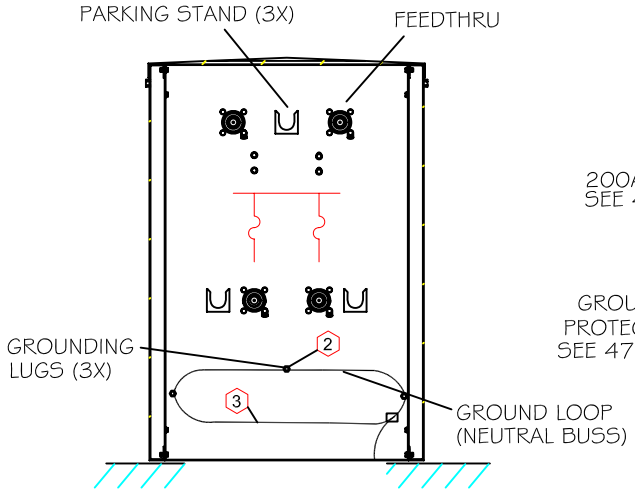

TERMINATION SIDE

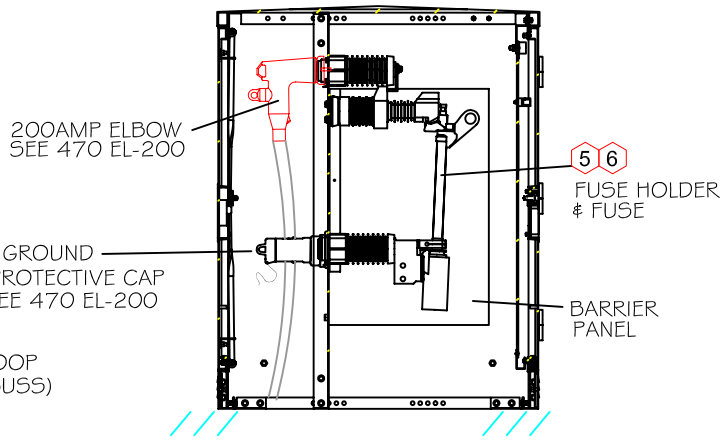

SIDE VIEW

SEE PAGE 2 - FOR MOUNTING HARDWARE DETAILS
SEE FV1-200 - FOR VAULT & GROUNDING DETAILS

ITEM	DESCRIPTION	QNTY		STOCK #
		FC1-200L	FC1-200R	
1a	POWER FUSE CABINET 1-PH - LOOP	1	0	9973020
1b	POWER FUSE CABINET 1-PH - RADIAL	0	1	9973010
2	xxx GROUND CONNECTOR	3	3	6589900
3	xxx #2 CU SD 7-STRAND	30FT	30FT	5080700
4	xxx COPPER CRIMPIT 2-2	6	6	6060700
5	xxx FUSE 80K SWITCH & FUSE CAB	2	1	9973480
6	FUSE & SW CAB END FIT	2	1	9973401

DATE: 08/20/04
REV: 5/24/2007
DRAWN: DT
CHK: RA/DP
FILE: H:\ENGSTANDARDS\05 SPEC\400\450\FC1-200

PG 1 OF 2

GROUP: FUSE CABINET - 1 PHASE - 200A
TYPE: LOOP OR RADIAL FEED- (15-25KV)

DIMENSIONS: 36" x 42" x 52"

FC1-200L
FC1-200R

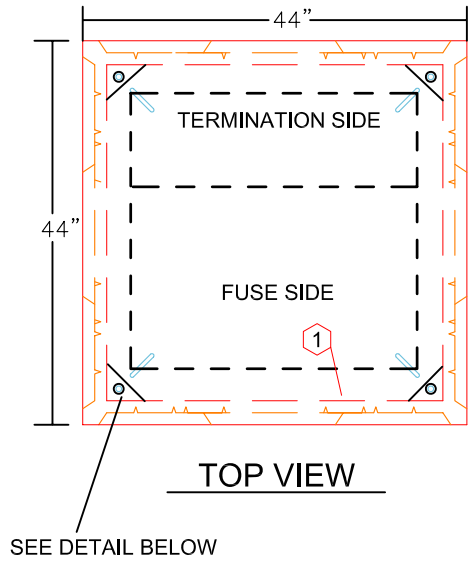

TOP VIEW

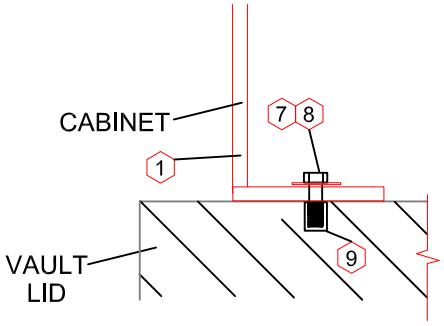

FRONT VIEW
ANCHOR

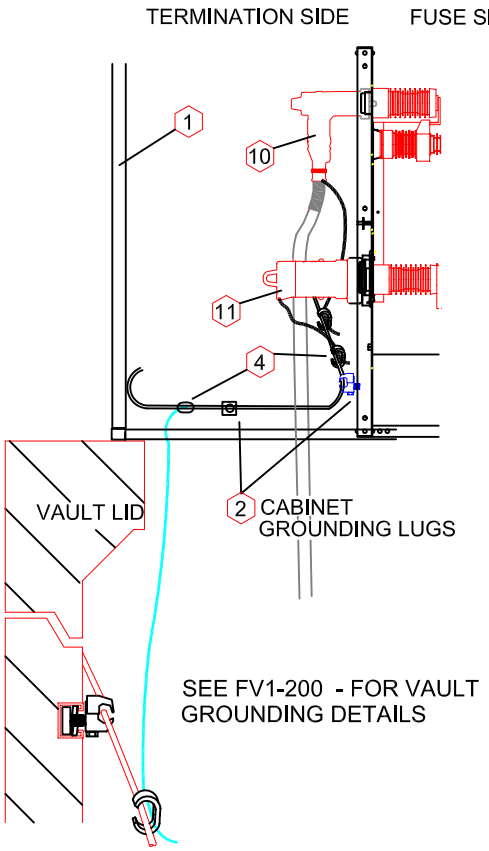

SIDE VIEW

ITEM	DESCRIPTION	QNTY FC1-200L	QNTY FC1-200R	STOCK #
7	xxx - BOLT MACH 1-3/4" x 1/2"	4	4	3132800
8	xxx - ROUND WASHER 1/2"	4	4	3280800
9	xxx - CONCRETE ANCHOR 1/2"	4	4	9976505
10	ELBOW (SEE 470.EL)	AS REQ'D	AS REQ'D	AS REQ'D
11	xxx GROUND PROTECTIVE CAPS	AS REQ'D	AS REQ'D	AS REQ'D

DATE: 08/20/04
REV: 5/24/2007
DRAWN: DT
CHK: RA/DP
FILE: H:\ENGSTANDARDS\05 SPEC\400\450\FC1-200

PG 2 OF 2

GROUP: FUSE CABINET - 1 PHASE - 200A
TYPE: LOOP OR RADIAL FEED - (15-25KV)

DIMENSIONS: 36" x 42" x 52"

FC1-200L
FC1-200R

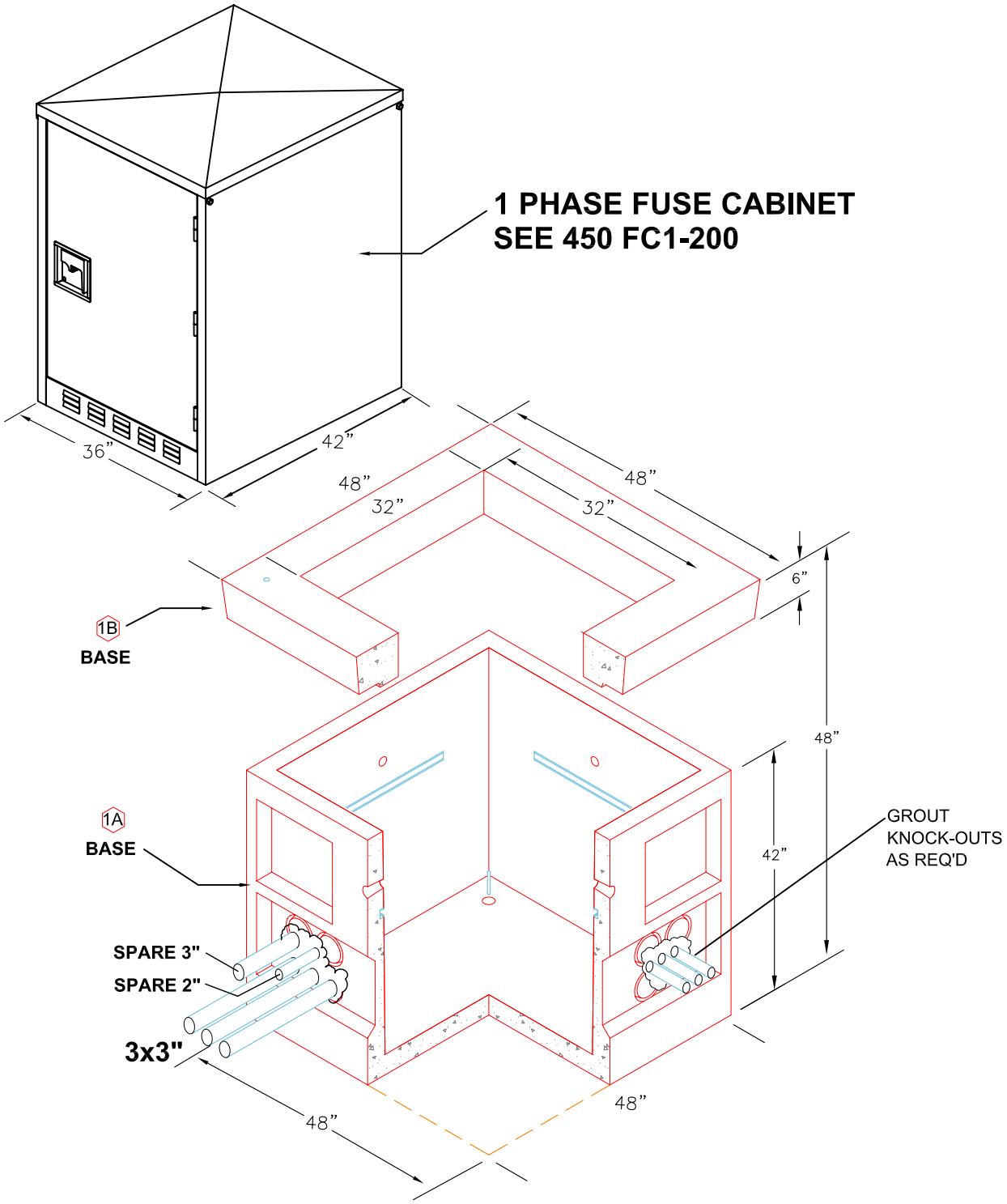

ITEM	DESCRIPTION	QUANTITY FV1-200	STOCK #
1A	VAULT 48" x 48" x 42" W/O COVER	1	9974700
1B	COVER 48" x 48" x6" 1PH FUSE CAB.	1	9974702

SEE PAGE 2 FOR GROUNDING DETAILS

DATE: 08/20/04
REV: 5/24/2007
DRAWN: JK/DT
CHK: RA/DP
PG 1 OF 2
FILE: H:\ENGSTANDARDS\05 SPECBOOK\400-DIST\450 FUSE\FV1-200

GROUP: PADMOUNT FUSE CABINET AND VAULT
TYPE: 200AMP - LOOP FEED - (15-25KVA)

DIMENSIONS: 44" x 44" x 48"

FV1-200

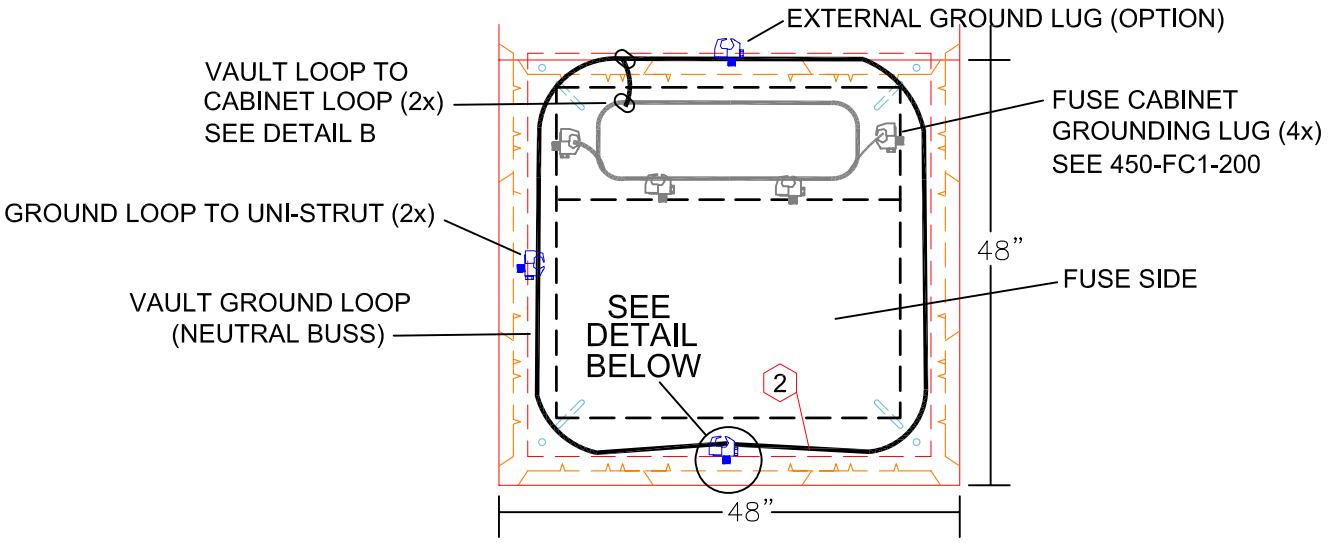

VAULT LID
TOP VIEW

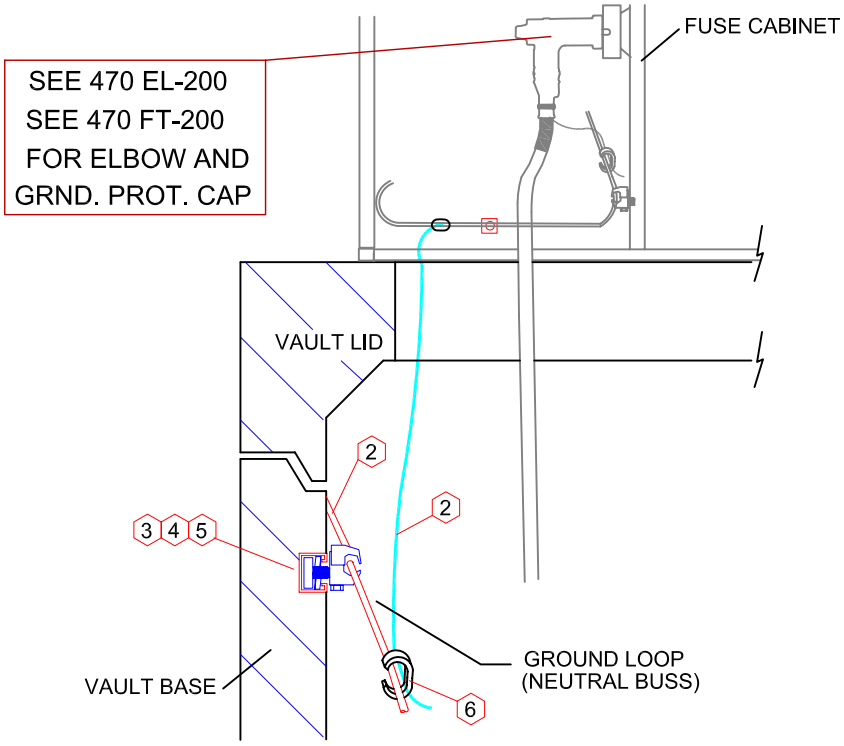

ITEM	DESCRIPTION	QUANTITY FV1-200	STOCK #
2	xxx - 2 CU SD 7-STRAND	20'	5080700
3	xxx - GROUNDING CONNECTOR	2	6589900
4	xxx - UNI-STRUT NUT 1/2"	2	3224000
5	xxx - WASHER 1/2" ROUND	2	3280800
6	xxx - COPPER CRIMP 2-2	4	6060700

DATE: 08/20/04
REV: 5/24/2007
DRAWN: JK/DT
CHK: RA/DP
PG 2 OF 2
FILE: H:\ENGSTANDARDS\05 SPECBOOK\400-DIST\450 FUSE\FV1-200

GROUP: PADMOUNT FUSE CABINET AND VAULT
DETAIL: VAULT GROUNDING

DIMENSIONS: 44" x 44" x 48"

FV1-200

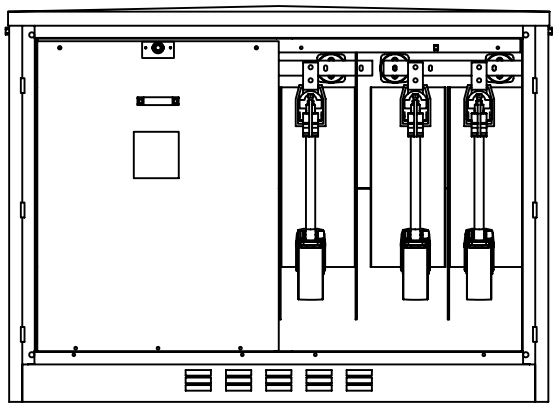

FUSE SIDE

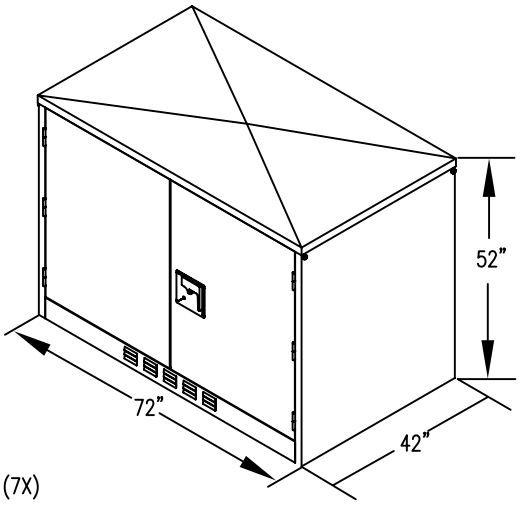

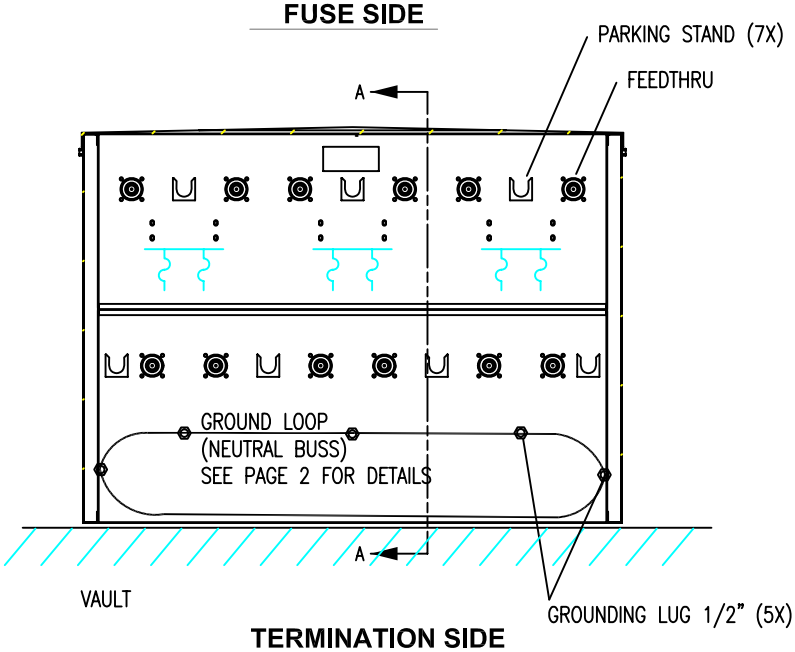

TERMINATION SIDE

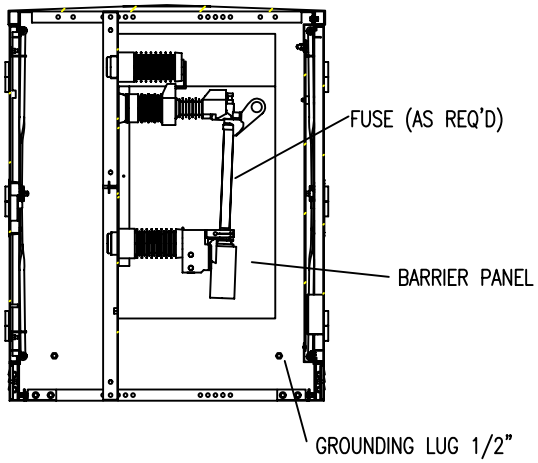

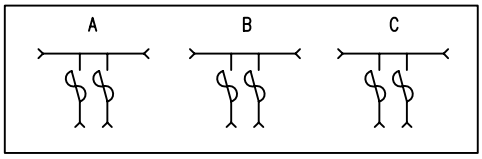

FC3-200L 1A

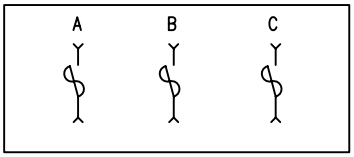

FC3-200R 1B

ITEM	DESCRIPTION	QNTY FC3-200L	QNTY FC3-200R	STOCK #
	FUSE CABINET			
1	POWER FUSE CAB 3PH LOOP	1		9973032
1	POWER FUSE CAB 3PH RADIAL		1	9973031

SEE FV3-200 FOR VAULT SPECIFICATIONS, GROUNDING, AND CABLE RACKING
SEE 470.EL-200 FOR 200AMP ELBOW TERMINATION

DATE: 08/20/04
REV: 5/24/2007
DRAWN: JK/DT
CHK: RA/DP
PG 1 OF 2
FILE: H:\ENGSTANDARDS\05 SPECBOOK\200-TRNSMSN\69KV\69TV1

GROUP: FUSE CABINET - 3 PHASE - 200A
TYPE: LOOP OR RADIAL FEED- (15-25KV)

DIMENSIONS: 72" x 42" x 52"

FC3-200L
FC3-200R

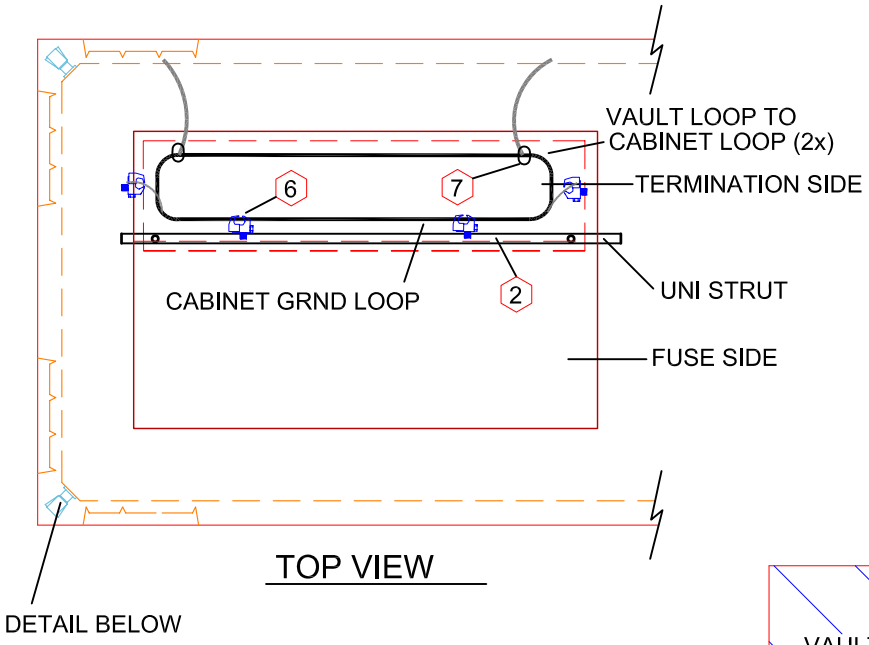

TOP VIEW

DETAIL BELOW

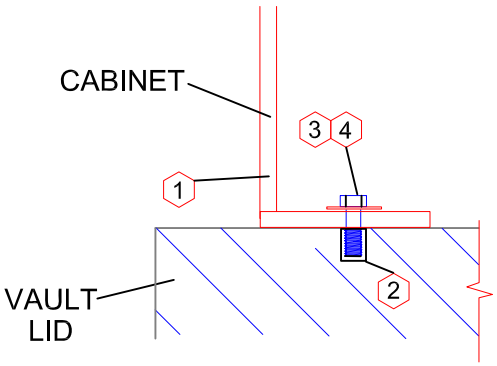

FRONT VIEW
ANCHOR

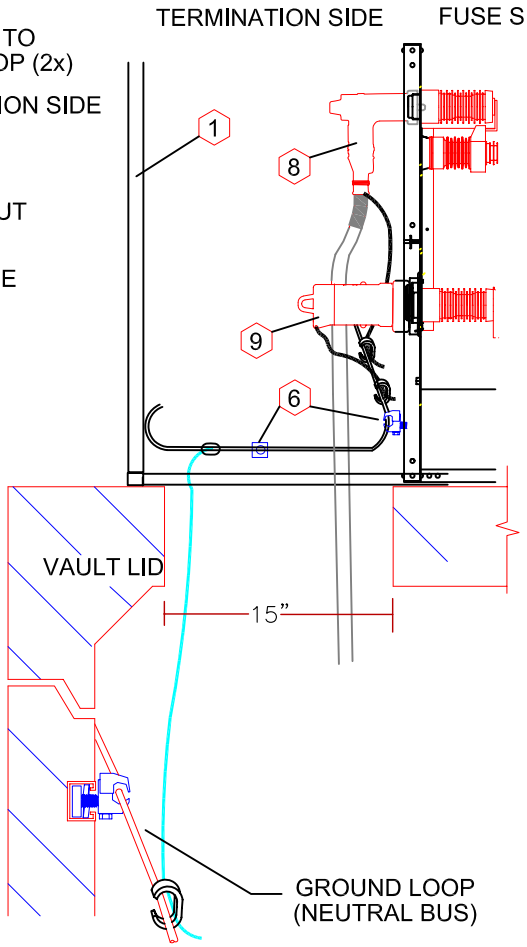

SIDE VIEW

ITEM	DESCRIPTION	QNTY		STOCK #
		FC3-200L	FC3-200R	
1a	POWER FUSE CAB 3PH LOOP	1		9973032
1b	POWER FUSE CAB 3PH RADIAL		1	9973031
2	xxx - CONCRETE ANCHOR 1/2"	4	4	9976505
3	xxx - BOLT MACH 1-3/4" x 1/2"	4	4	3132800
4	xxx - WASHER 1/2" ROUND	4	4	3280800
5	xxx 2 CU SD 7-STRAND	16'	16'	5080700
6	xxx - GROUND CONNECTOR	5	5	6589900
7	xxx COPPER CRIMP 2-2	8	8	6060700
8	ELBOW (SEE 470.EL)	AS REQ'D	AS REQ'D	**AS REQ'D**
9	xxx GROUND PROTECTOR CAP (SEE 470.EL)	AS REQ'D	AS REQ'D	**AS REQ'D**
10	FUSE & SW CAB END FIT	6	3	9973401
11	xxx FUSE 80K SWITCH & FUSE CAB	6	3	9973480

DATE: 08/20/04
REV: 5/24/2007
DRAWN: JK/DT
CHK: RA/DP
PG 2 OF 2
FILE: H:\ENGSTANDARDS\05 SPECBOOK\200-TRNSMSN\69KV\69TV1

GROUP: FUSE CABINET - 3 PHASE - 200A
TYPE: LOOP OR RADIAL FEED - (15-25KV)

DIMENSIONS: 72" x 42" x 52"

FC3-200L
FC3-200R

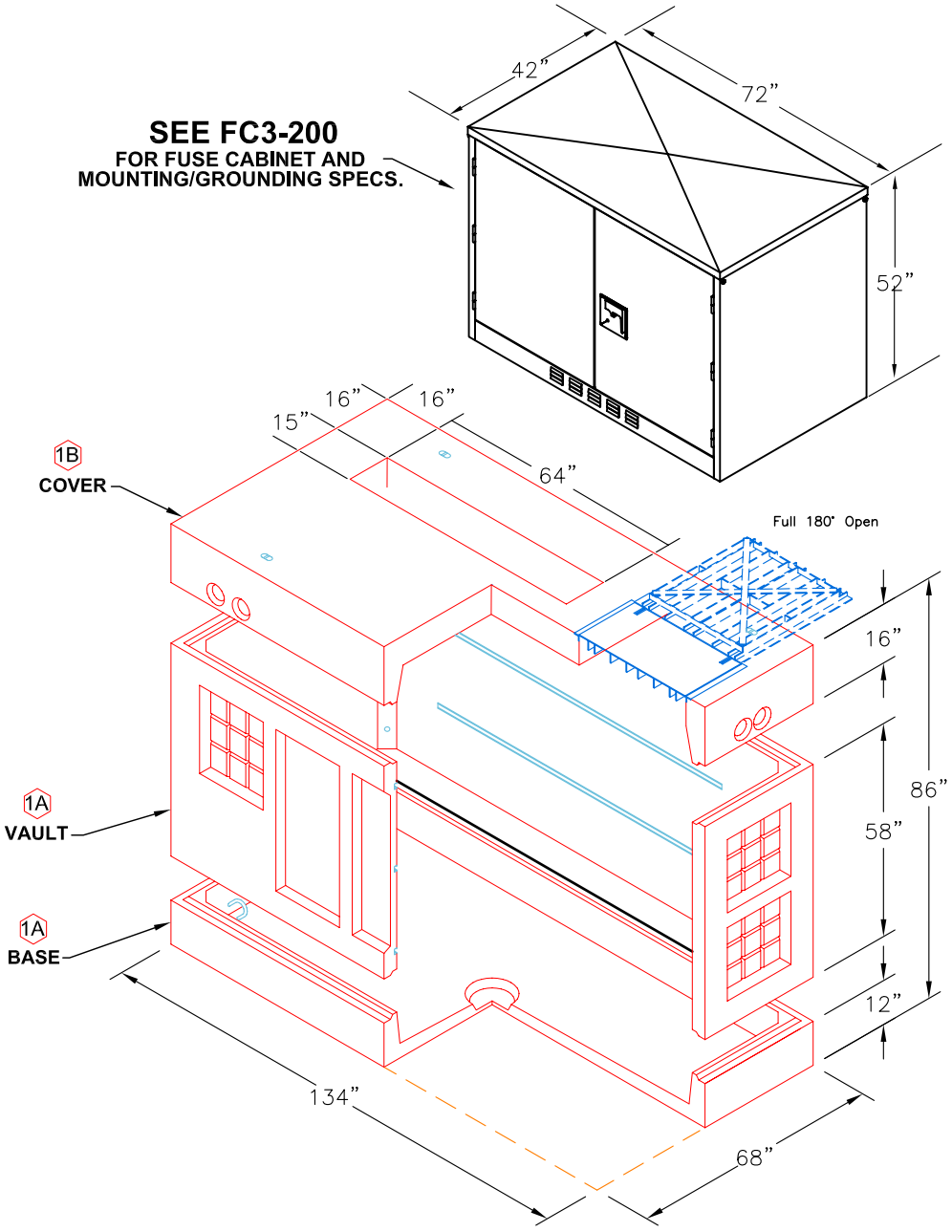

ITEM	DESCRIPTION	QNTY FV3-200	STOCK #
1A	VAULT 134" x 68" x 70" 2PC	1	9975833
1B	COVER 134"x68"x16" w/ STEEL DOOR	1	9975834

DATE: 08/20/04
REV: 5/24/2007
DRAWN: JK/DT
CHK: RA/DP
PG 1 OF 3
FILE: H:\ENGSTANDARDS\05 SPECBOOK\400-DIST\450 FUSE\FV3-200

GROUP: PADMOUNT FUSE CABINET & VAULT - 200AMP
TYPE: 3 PHASE - LOOP FEED - (15-25KV)

DIMENSIONS: 134" x 68" x 86"

FV3-200

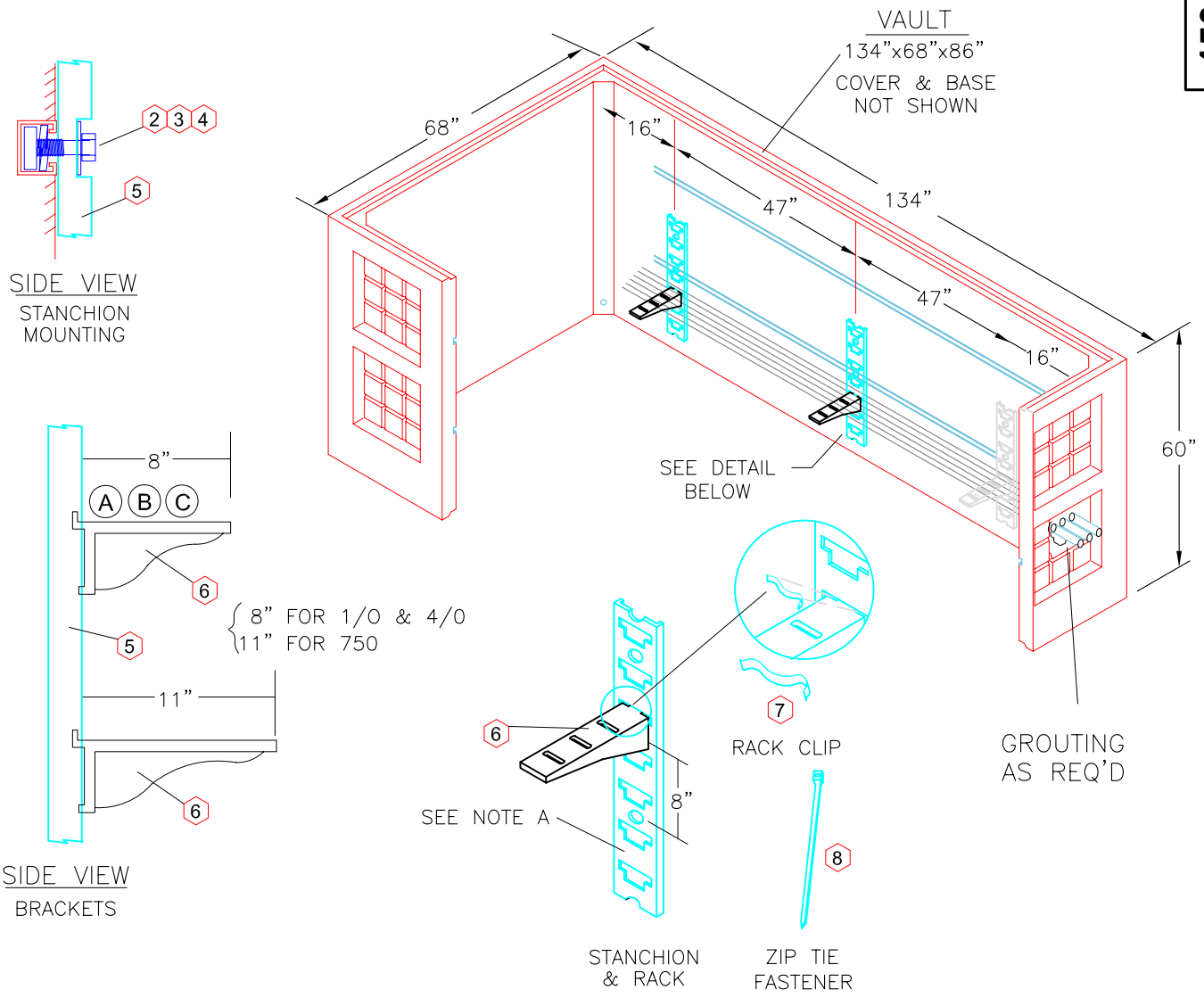

SEE VAULT MISC.(460.UVM–2)
FOR STANCHION AND RACK OPTIONS

ITEM	DESCRIPTION	QUANTITY FV3-200	STOCK #
2	xxx - SS BOLT - 2" X 1/2"	12	3133200
3	xxx - SS WASHER - 1/2" RND	12	3330000
4	xxx - UNI-STRUT NUT 1/2"	12	3224000
5	xxx - CABLE RACK 24" STANCHION	6	9976524
6	xxx - CABLE RACK ARM 11"	6	9976511
7	xxx - CABLE RACK ARM CLIPS	12	9976500
8	LARGE ZIP TIES 21"	AS REQ'D	AS REQ'D

NOTE A: THE 24" AND 36" STANCHIONS MAY BE USED TOGETHER TO ENABLE INCREASING THE OVERALL LENGTH OF THE RACK TO 60".

DATE: 08/20/04
REV: 5/24/2007
DRAWN: JK/DT
CHK: RA/DP
PG 2 OF 3
FILE: H:\ENGSTANDARDS\05 SPECBOOK\400-DIST\450 FUSE\FV3-200

GROUP: PADMOUNT FUSE CABINET & VAULT - 200AMP
DETAIL: CABLE RACKING

DIMENSIONS: 134" x 68" x 86"

FV3-200

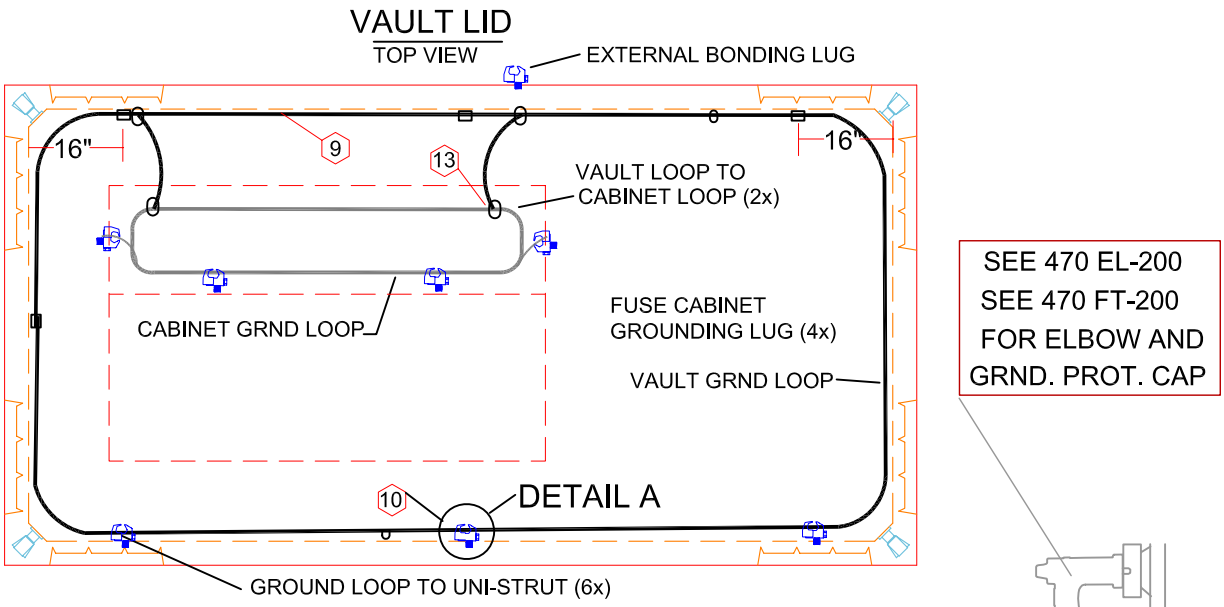

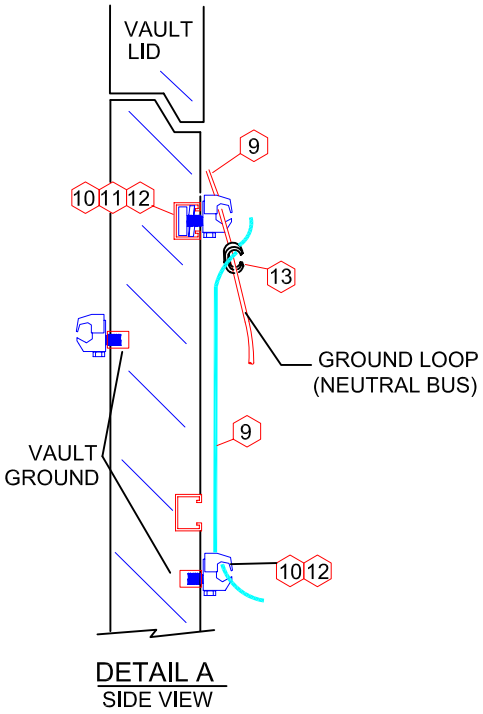

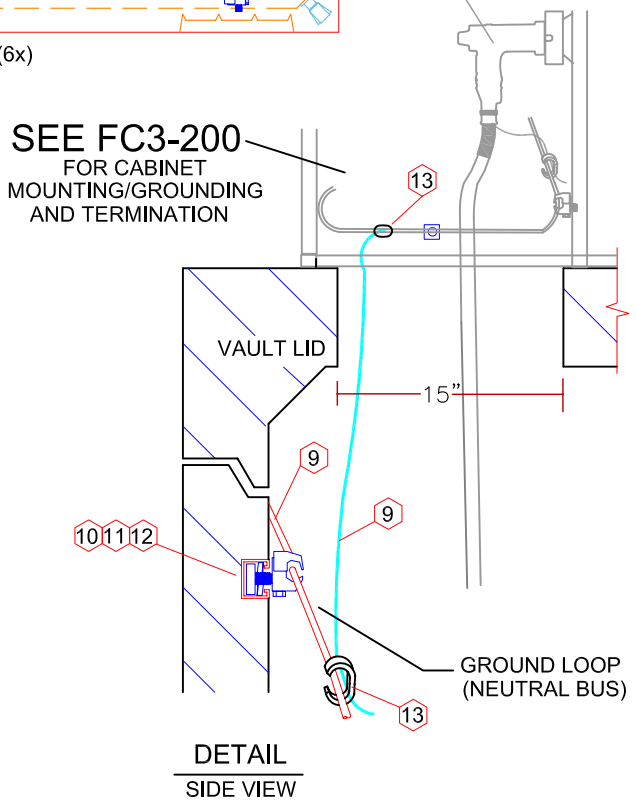

ITEM	DESCRIPTION	QUANTITY FV3-200	STOCK #
9	xxx - 2 CU SD 7-STRAND	36'	5080700
10	xxx GROUNDING CONNECTOR	8	6589900
11	xxx UNI-STRUT NUT 1/2"	6	3224000
12	xxx - WASHER 1/2" ROUND	6	3280800
13	xxx -COPPER CRIMP 2-2	3	6060700

DATE: 08/20/04
REV: 5/24/2007
DRAWN: JK/DT
CHK: RA/DP
PG 3 OF 3
FILE: H:\ENGSTANDARDS\05 SPECBOOK\400-DIST\450 FUSE\FV3-200

GROUP: PADMOUNT FUSE CABINET & VAULT - 200AMP
TYPE: GROUNDING

DIMENSIONS: 134" x 68" x 86"

FV3-200

VAULT STOCK AND APPLICATIONS

JUNCTION

APPLICATION	DESCRIPTION	Utility Vault id	STOCK #	ASSEMBLY #
1PH JUNCTION -200AMP	VAULT - 30 x 30 x 25.5 (w / STEEL DOOR)	*3030-LA*	9974800	JV1-200
1PH & VPH JUNCTION -200AMP	VAULT - 48 x 48 x 42	*444-LA*	9974700	JV2-200
	COVER - 48 x 48 x 6 (w/ STEEL DOOR)		9974701	
3PH JUNCTION -200AMP	VAULT - 84 x 56 x 72	*577-LA*	9975500	JV3-200
	COVER - 84 x 56 x 12 (w / STEEL DOOR)		9975501	
3PH JUNCTION -600AMP	VAULT - 84 x 84 x 66	*776-LA*	9975600	JV3-600
	COVER - 84 x 84 x 8 (w / STEEL DOOR)		9975602	

PADMOUNT

APPLICATION	DESCRIPTION	*Utility Vault id*	STOCK #	ASSEMBLY #
3PH TRANSFORMERS (75-300KVA)	VAUL T - 56 x 56 x 42	*504-LA*	9975400	PT3V-1
	COVER - 70 x 60 x 6 (75-300 3PH TSF)		9975401	
3PH TRANSFORMERS (500-2500KVA)	VAULT - 84 x 84 x 66	*776-LA*	9975600	PT3V-2
	COVER - 96 x 96 x 8 (500-2500 3PH TSF)		9975601	
1PH FUSE CABINET (200AMP)	VAULT - 48 x 48 x 42	*444-LA*	9974700	FV1-200
	COVER - 48 x 48 x 6 (1PH FUSE CAB)		9974702	
3PH FUSE CABINET (200AMP)	VAULT - 134 x 68 x 70 (2PC)	*5106-LA*	9975833	FV3-200
	COVER - 134 x 68 x 16 (3PH FUSE CAB)		9975834	
SWITCHGEAR (600AMP/200AMP)	VAULT - 152 x 80 x 72 (2PC)	*612-LA*	9975812	SGV-600
	COVER - 152 x 80 x 18 (SWITCH CAB)		9975813	

3PH TRSF. SECONDARY VAULT & SPLICE VAULT

APPLICATION	DESCRIPTION	Utility Vault id	STOCK #	ASSEMBLY #
3 PH TRSF - SECONDARY. VAULT	VAULT - 56 x 56 x 42	*504-LA*	9975400	
	COVER - 56 x 56 x 6 (W/ 17" x 20" OPENING)		9975414	JSP3-14
	COVER - 56 x 56 x 6 (W/ 40" x 24" OPENING)		9975430	JSP3-30
3 PH 600AMP SPLICE VAULT	VAULT - 84 x 56 x 72	*577-LA*	9975500	SPV-600
	COVER -84 x 56 x 12" (W/ STEEL DOOR)		9975501	

VAULT RISERS

APPLICATION	DESCRIPTION	*Utility Vault id*	STOCK #	ASSEMBLY #
JUNCTION BOX - 6" LID	RISER - 48 x 48 x 6 (w / STEEL DOOR)	*for 444-LA*	9974600	VR-486
JUNCTION BOX - 6" LID	RISER - 30 x 30 x 6 (w / STEEL DOOR)	*for 3030-LA*	9974900	VR-306
SPLICE VAULT	RISER - 84 x 56 x 24 (w/o door)	*for 577-LA*	9975505	SVR-24
3PH TRSF (75-300KVA)	RISER - 56 x 56 x 6 (w/o door)	*for 504-LA*	9975405	TVR-6
3PH TRSF (75-300KVA)	RISER - 56 x 56 x 12 (w/o door)	*for 504-LA*	9975406	TVR-12
3PH TRSF (75-300KVA)	RISER - 56 x 56 x 18 (w/o door)	*for 504-LA*	9975407	TVR-18

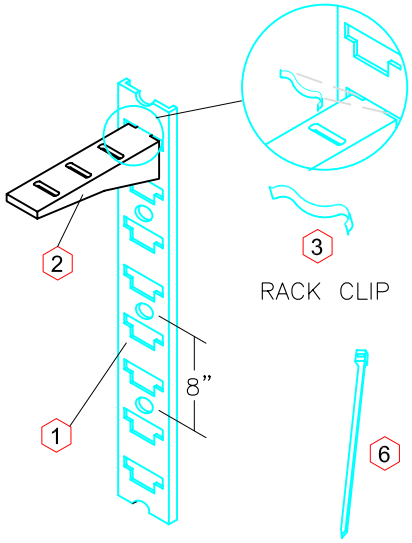

RACK CLIP

STANCHION & RACK

ZIP TIE FASTENER

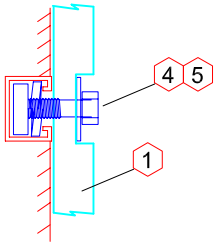

SIDE VIEW
STANCHION MOUNTING

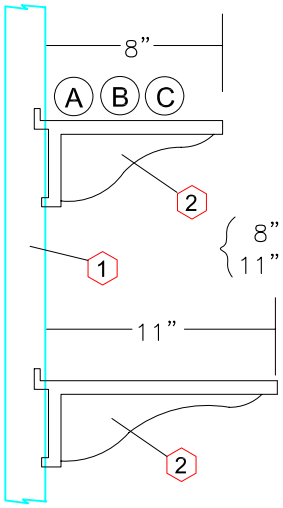

8" FOR 1/0 & 4/0
11" FOR 750

SIDE VIEW
BRACKETS

ST24-1 (24" STANCHION w/ 8" ARMS)
ST24-2 (24" STANCHION w/ 11" ARMS)
ST36-1 (36" STANCHION w/ 8" ARMS)
ST36-2 (36" STANCHION w/ 11" ARMS)

ITEM	DESCRIPTION	24" STANCHION		36" STANCHION		STOCK #
		ST24-1	ST24-2	ST36-1	ST36-2	
1	CABLE RACK 24" STANCHION	1	1	0	0	9976524
1	CABLE RACK 36" STANCHION	0	0	1	1	9976536
2	CABLE RACK ARM 8"	1	0	1	0	9976508
2	CABLE RACK ARM 11"	0	1	0	1	9976511
3	CABLE RACK ARM CLIPS	1	1	1	1	9976500
4	SS BOLT - 1-1/2" X 1/2"	1	1	1	1	3132400
5	XXX - SS WASHER - 1/2" RND	2	2	2	2	3330000
6	LARGE ZIP TIES 21"	AS REQ'D	AS REQ'D	AS REQ'D	AS REQ'D	AS REQ'D

DATE: 08/20/04
REV: 5/24/2007
DRAWN: JK/DT
CHK: RA/DP
PG 1 OF 1
FILE: H:\ENGSTANDARDS\05 SPECBOOK\400-UG\460 VAULT MISC\UVM-2

GROUP: UNDERGROUND - VAULT MISCELLANEOUS
DETAIL: STANCHION & RACK ARM

OPTIONS: 24" 0R 32" STANCHIONS W/ 8" AND 11" RACK ARMS

UVM-2

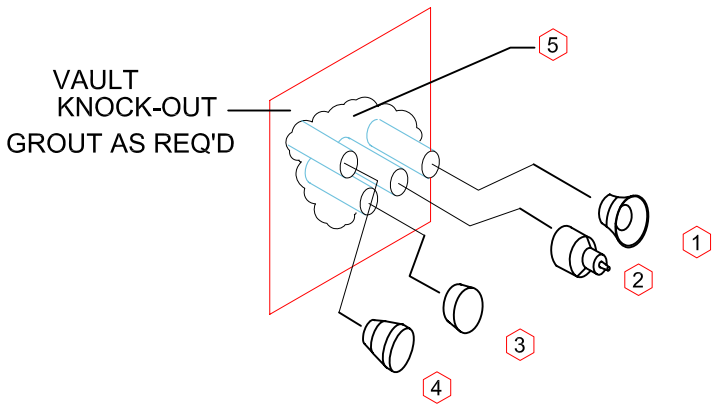

CONDUIT ENDS

ITEM	DESCRIPTION	STOCK #	SET-CODE
	BELL ENDS		
1	xxx - BELL END 1-1/2" PVC	8405600	BE-1.5
"	xxx - BELL END 2" PVC	8405800	BE-2
"	xxx - BELL END 3" PVC	8406200	BE-3
"	xxx - BELL END 4" PVC	8406600	BE-4
"	xxx - BELL END 6" PVC	8407700	BE-6
	MULTI-CAPS		
2	xxx - MULTI-CAP 1-1/2"	9060100	MC-1.5
"	xxx - MULTI-CAP 2"	9060200	MC-2
"	xxx - MULTI-CAP 3"	9060300	MC-3
"	xxx - MULTI-CAP 4"	9060304	MC-4
	RED-CAPS		
3	xxx - RED CAP 3"	9060400	RC-3
	CONDUIT PLUG		
4	xxx - PLUG CONDUIT 4"	8990100	CP-4

FOAM SEALANT

ITEM	DESCRIPTION	STOCK #
5	xxx - FOAM SEALANT	5479700

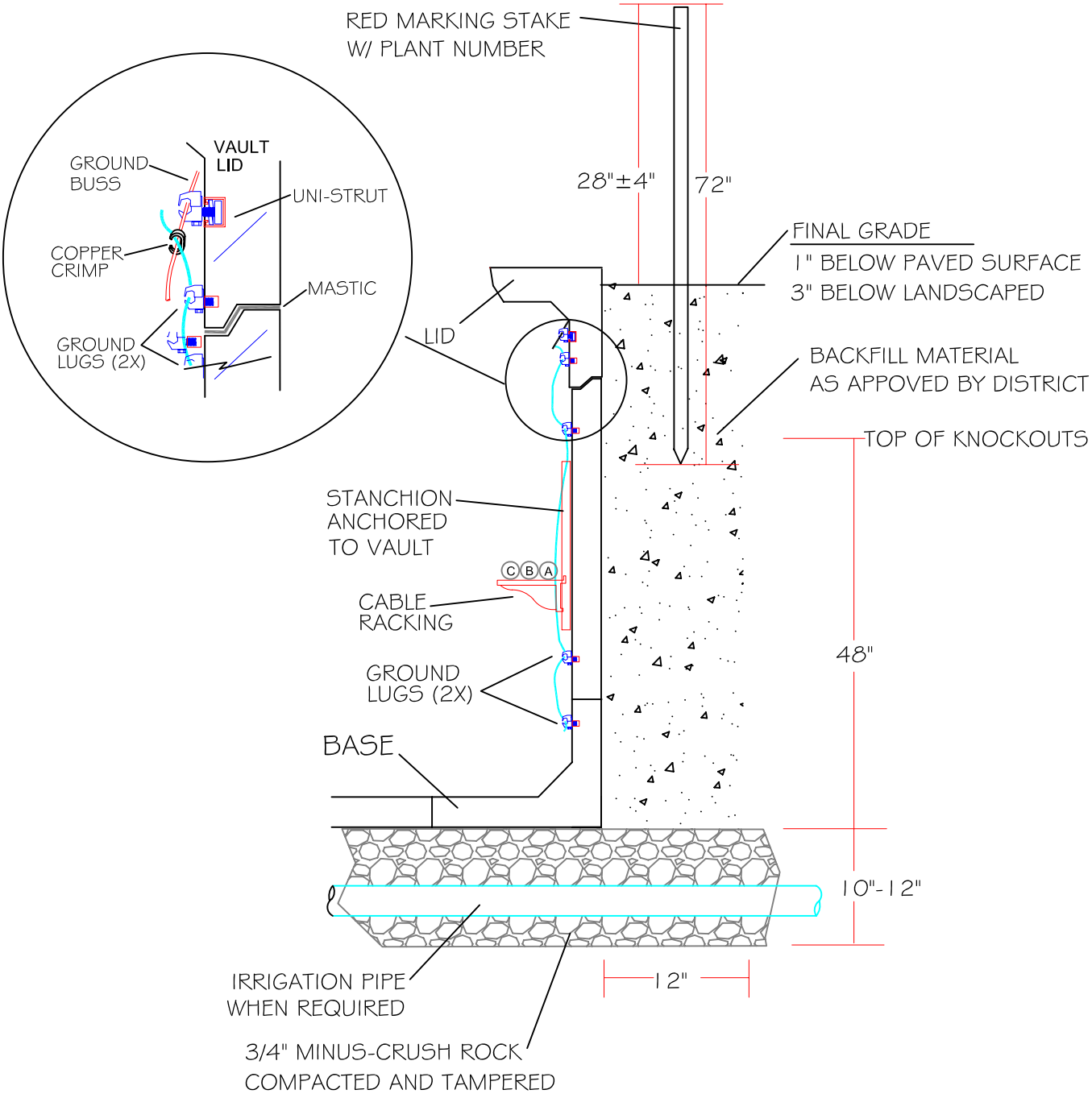

DATE: 08/20/04 REV: 5/24/2007 DRAWN: JK/DT CHK: RA/DP PG 1 OF 1 FILE: H:\ENGSTANDARDS\05 SPECBOOK\400-DIST_UG\460\VAULT PREP	**GROUP:** CONCRETE VAULTS **DETAIL:** ASSEMBLY DETAILS	
	SIZE:	**UVM-4**

3030-LA

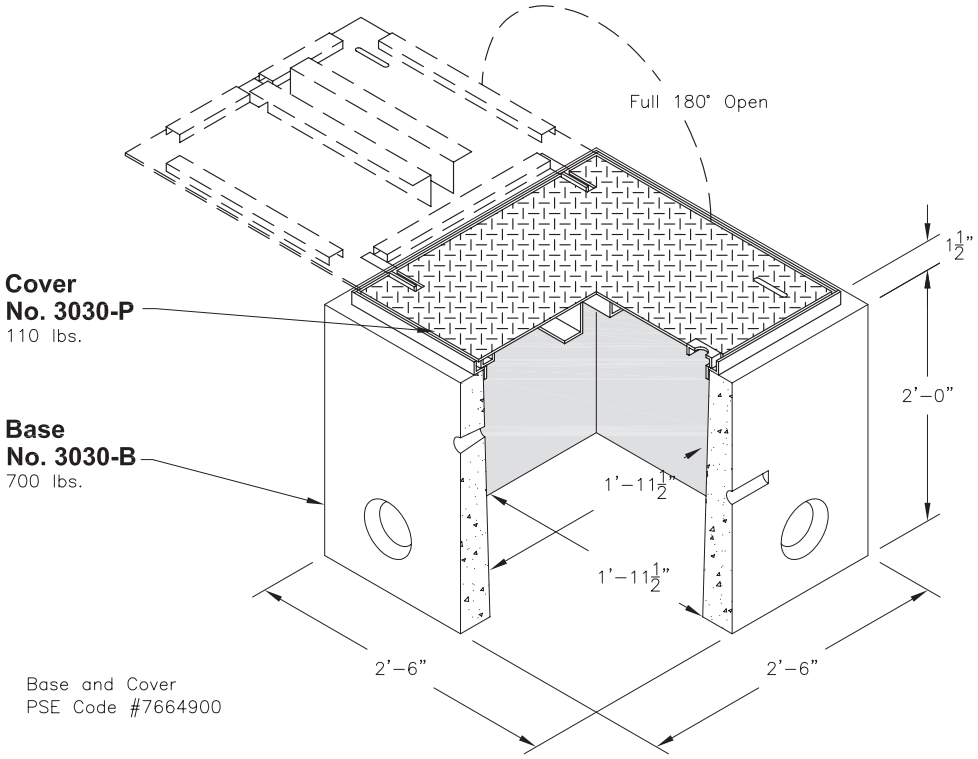

Base and Cover
PSE Code #7664900

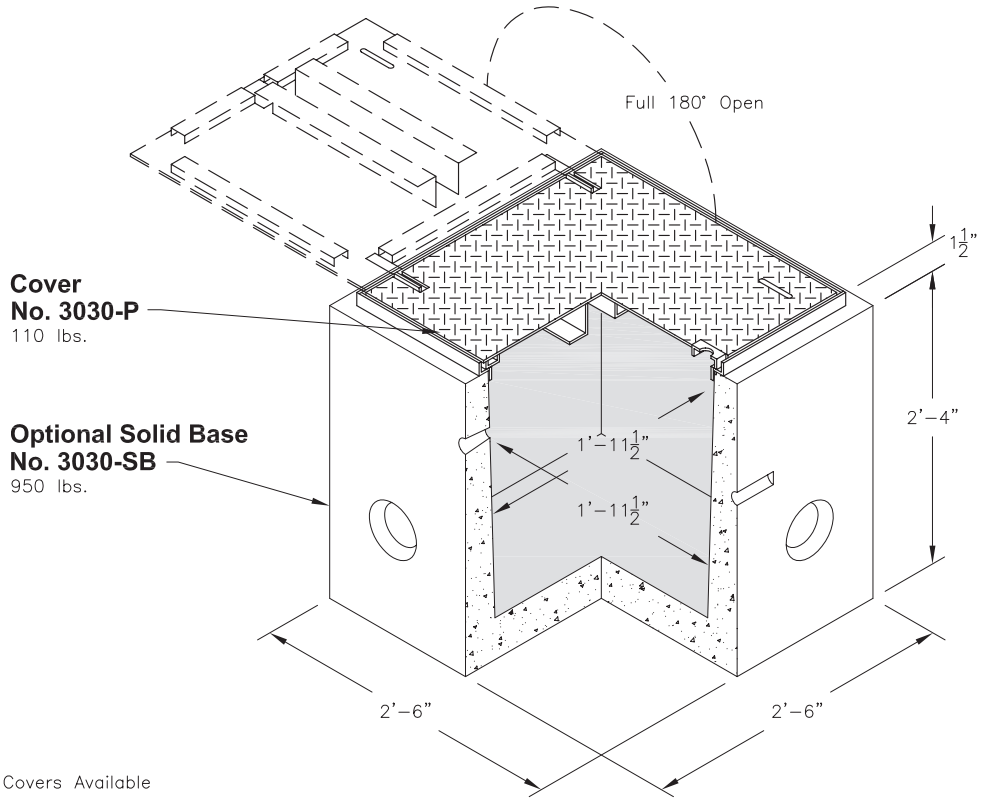

Non Skid Covers Available

FOR DETAILS, SEE REVERSE SIDE >>

Items Shown Are Subject To Change Without Notice
Issue Date: January 2006

©1983-2006 Oldcastle Precast, Inc.

Mailing Address
PO Box 588
Auburn, WA 98071

Phone: 800.892.1538
Fax: 253.735.4201
Email: uvauburn@oldcastleprecast.com

uvauburn.com
a division of Oldcastle Precast, Inc.

444-LA

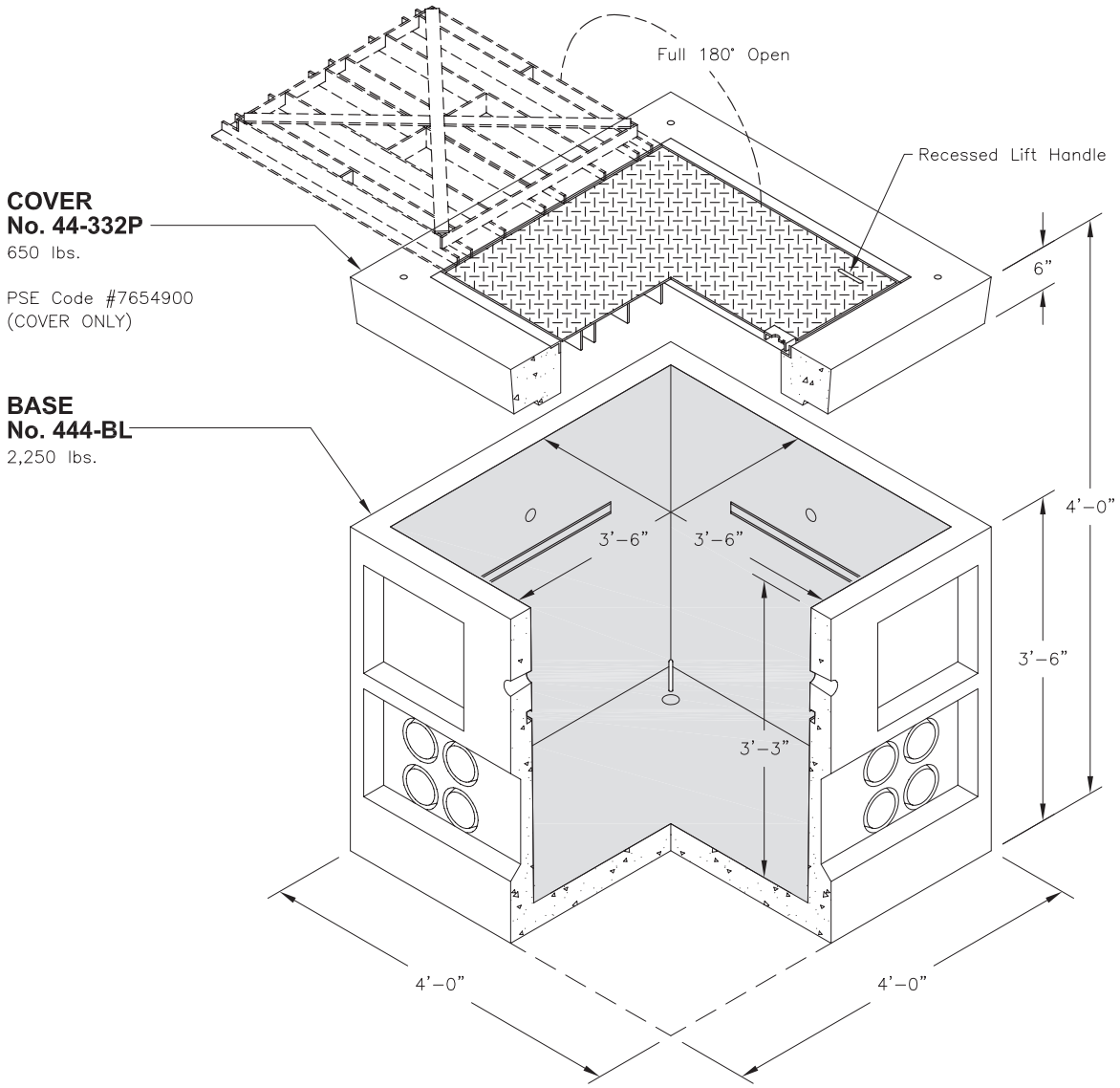

OPTIONAL COVER SECTIONS

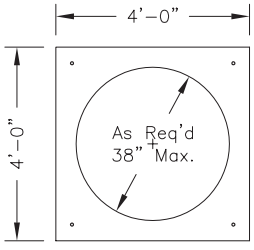

ROUND ACCESS
No. 44–38C (Shown)
600 lbs.

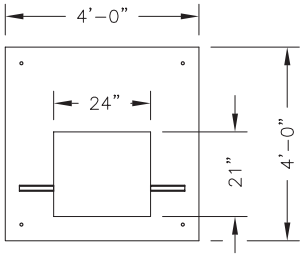

PADMOUNT
No. 44–2124
1,050 lbs.
PSE Code #7658400
(COVER ONLY)

Non Skid Covers Available

FOR DETAILS, SEE REVERSE SIDE >>

Items Shown Are Subject To Change Without Notice
Issue Date: January 2006

©1970-2006 Oldcastle Precast, Inc.

Mailing Address
PO Box 588
Auburn, WA 98071

Phone: 800.892.1538
Fax: 253.735.4201
Email: uvauburn@oldcastleprecast.com

uvauburn.com
a division of Oldcastle Precast, Inc.

504-LA

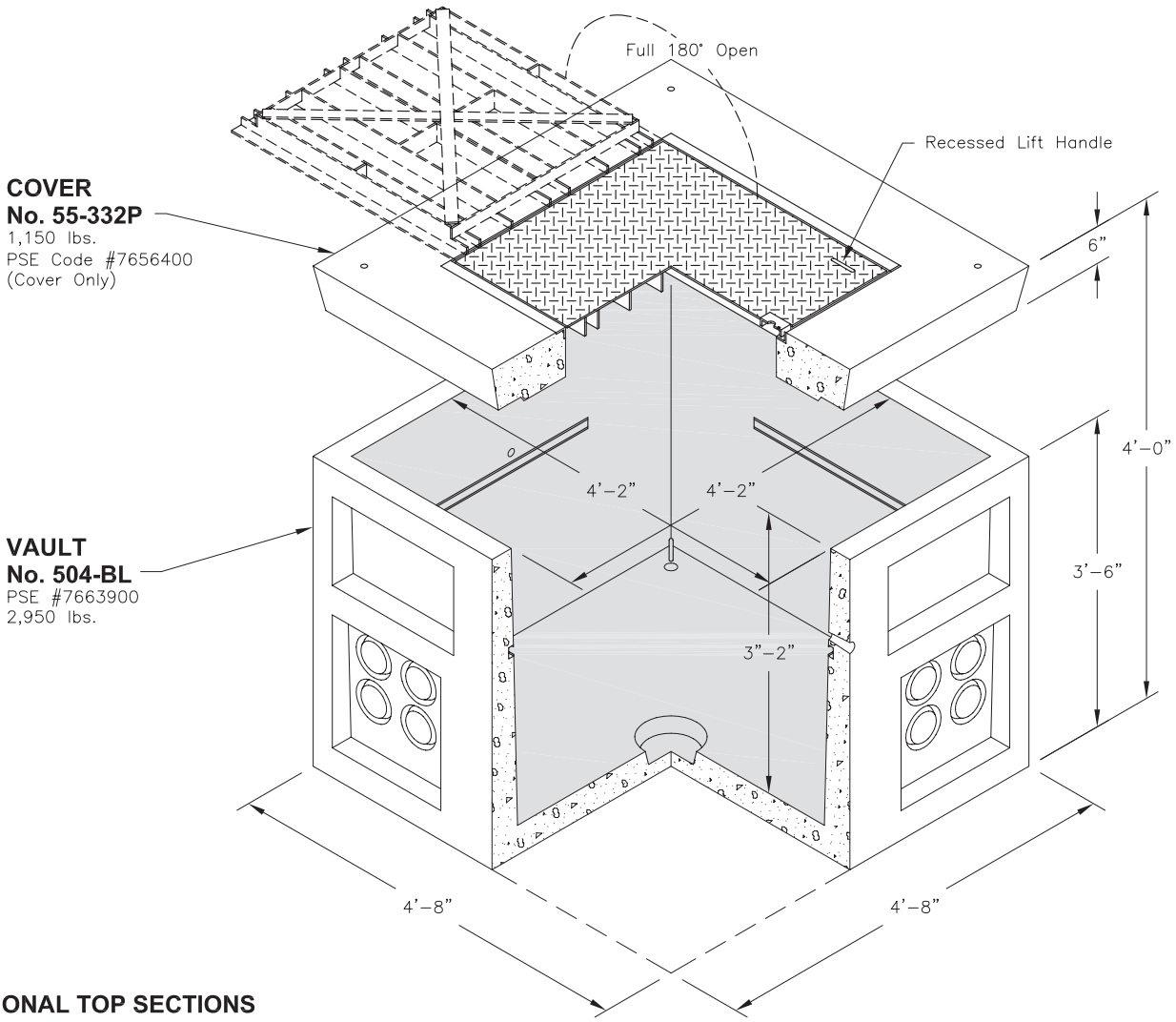

OPTIONAL TOP SECTIONS

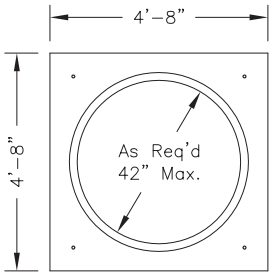

ROUND ACCESS
No. 55–38C (Shown)
1,050 lbs.

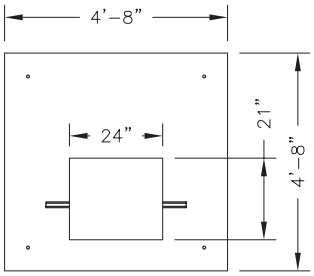

PADMOUNT
No. 55–2124
1,500 lbs.
PSE Code #7658500

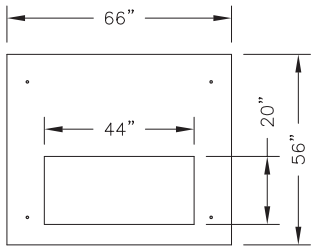

PADMOUNT
No. 56–2044
1,550 lbs.
PSE Code #7655200

Non Skid Covers Available

FOR DETAILS, SEE REVERSE SIDE >>

Items Shown Are Subject To Change Without Notice
Issue Date: January 2006

©1970-2006 Oldcastle Precast, Inc.

Mailing Address
PO Box 588
Auburn, WA 98071

Phone: 800.892.1538
Fax: 253.735.4201
Email: uvauburn@oldcastleprecast.com

uvauburn.com
a division of Oldcastle Precast, Inc.

577-LA

SCL 80 SYLE COVER
No. 57-CLX-2-33-SCL
2,000 lbs.

VAULT
No. 577-BL
6,600 lbs.

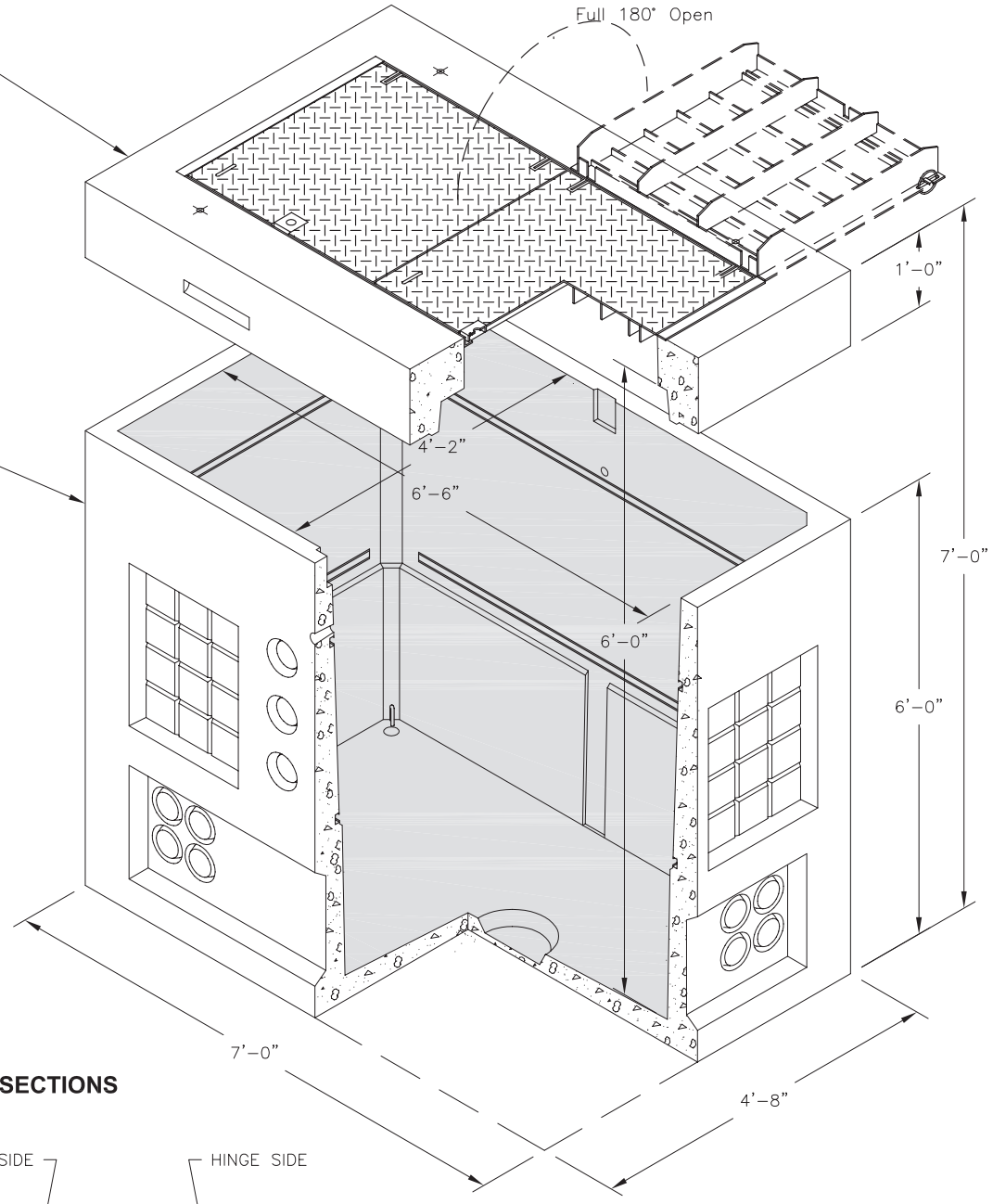

OPTIONAL COVER SECTIONS

All Covers 12" Thick

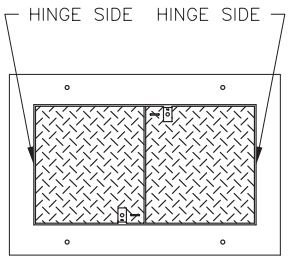

LOCKING STEEL COVERS
No. 57TL–2–332P
2,100 lbs.

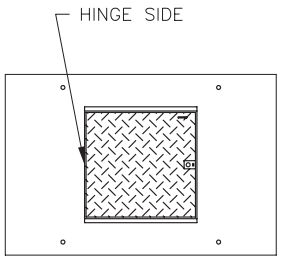

LOCKING STEEL COVER
No. 57TL–332P
2,950 lbs.

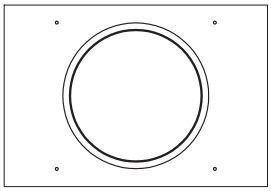

COVER
No. 57–TL–42–C
2,650 lbs.

Non Skid Covers Available

FOR DETAILS, SEE REVERSE SIDE >>

Items Shown Are Subject To Change Without Notice
Issue Date: January 2006

©1970-2006 Oldcastle Precast, Inc.

Mailing Address
PO Box 588
Auburn, WA 98071

Phone: 800.892.1538
Fax: 253.735.4201
Email: uvauburn@oldcastleprecast.com

uvauburn.com
a division of Oldcastle Precast, Inc.

612-LA

COVER
No. 612-TL-42C
7,000 lbs

VAULT
No. 612-ML
9,000 lbs

BASE
No. 612-SB
10,500 lbs

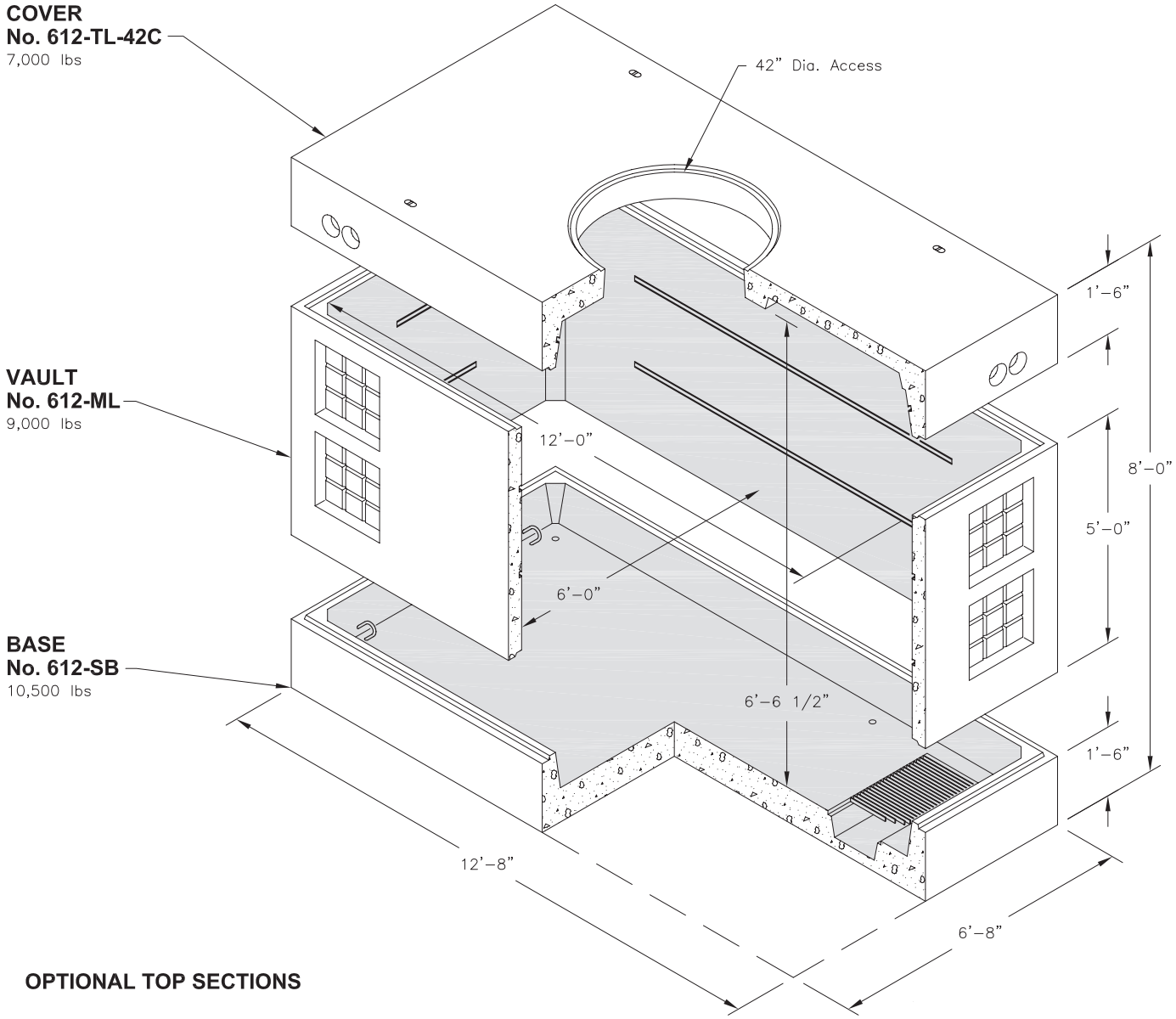

OPTIONAL TOP SECTIONS

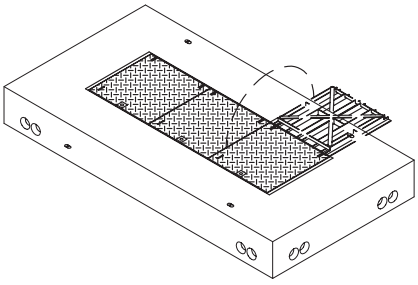

LOCKING STEEL COVERS
No. 612–TL–3–332P
SnoPUD Cat ID #782252
7,400 lbs.

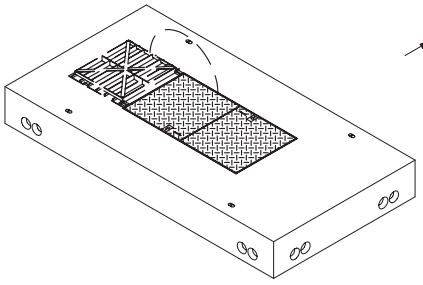

LOCKING STEEL COVERS
No. 612–TL–2–332P
8,300 lbs.

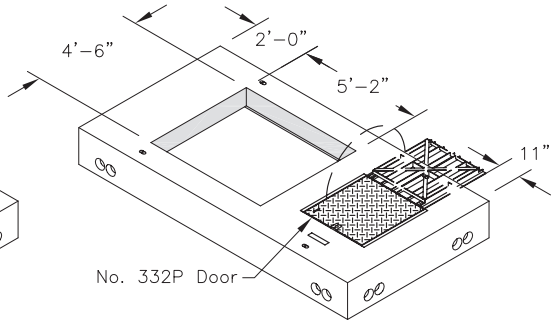

LOCKING STEEL COVER WITH PADMOUNT
Snohomish County P.U.D. Standard
SnoPUD Cat ID #742202
6,700 lbs.

Non Skid Covers Available

FOR DETAILS, SEE REVERSE SIDE >>

Items Shown Are Subject To Change Without Notice
Issue Date: January 2006

©1970-2006 Oldcastle Precast, Inc.

Mailing Address
PO Box 588
Auburn, WA 98071

Phone: 800.892.1538
Fax: 253.735.4201
Email: uvauburn@oldcastleprecast.com

uvauburn.com
a division of Oldcastle Precast, Inc.

776-LA

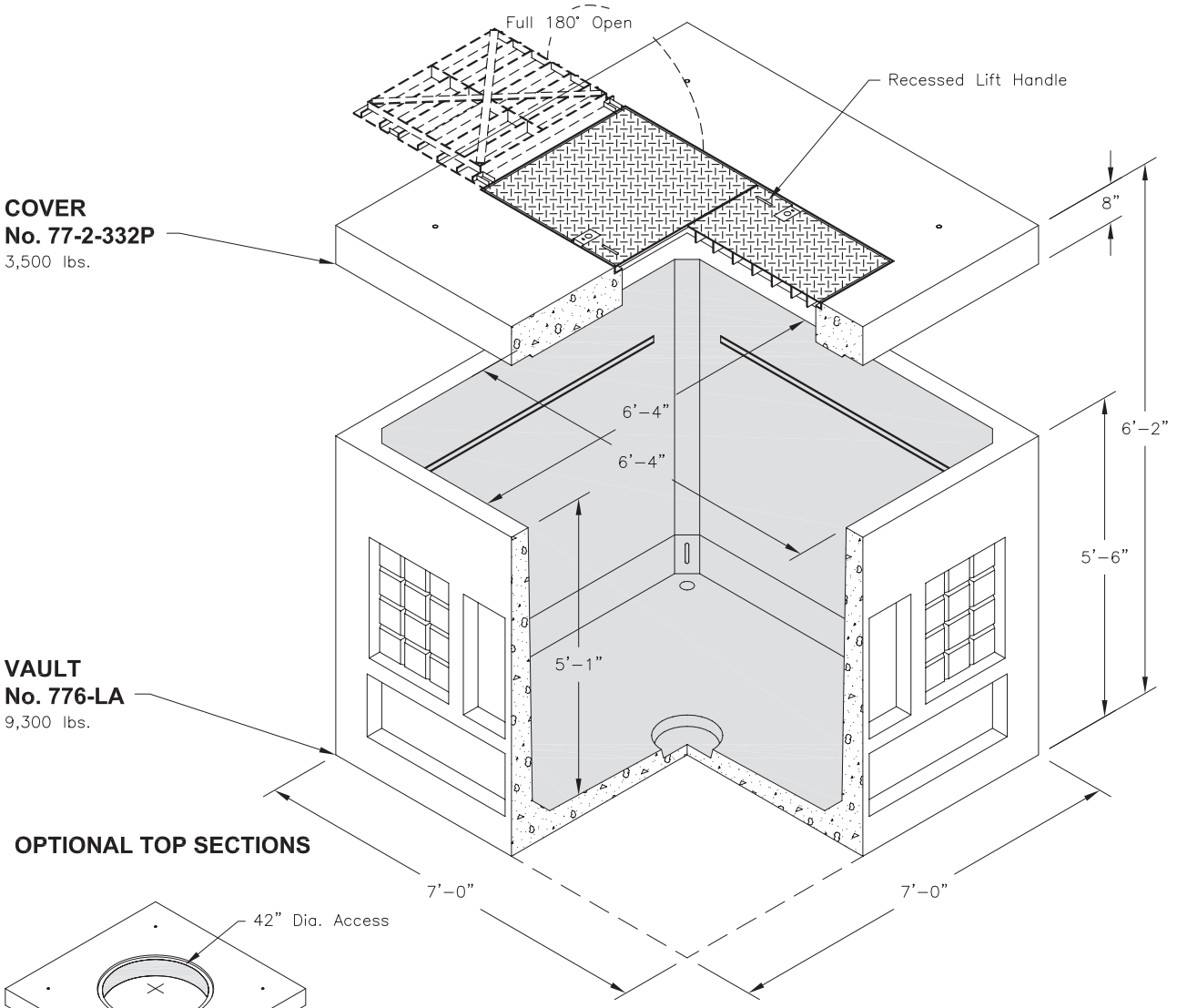

COVER
No. 77-2-332P
3,500 lbs.

VAULT
No. 776-LA
9,300 lbs.

OPTIONAL TOP SECTIONS

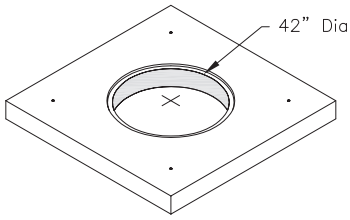

ROUND ACCESS OPENING
No. 77–42C
4,150 lbs

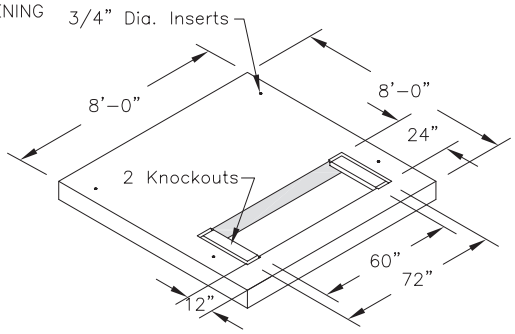

PADMOUNT TOP
No. 77–88–2460
PSE CODE #7917901
(Base and Cover Assembly)
4,900 lbs.

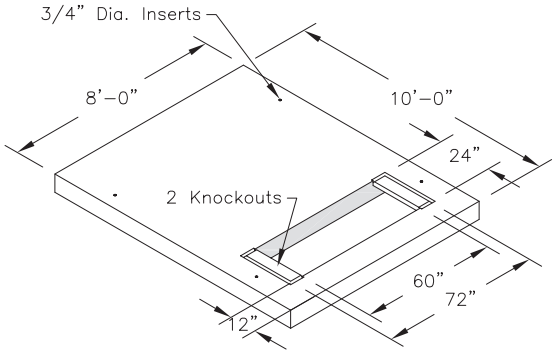

PADMOUNT TOP
No. 77–810–2460
PSE CODE #7917900
(Base and Cover Assembly)
6,500 lbs.

Non Skid Covers Available

FOR DETAILS, SEE REVERSE SIDE >>

Items Shown Are Subject To Change Without Notice
Issue Date: January 2006

©1988-2006 Oldcastle Precast, Inc.

Mailing Address
PO Box 588
Auburn, WA 98071

Phone: 800.892.1538
Fax: 253.735.4201
Email: uvauburn@oldcastleprecast.com

uvauburn.com
a division of Oldcastle Precast, Inc.

5106-LA

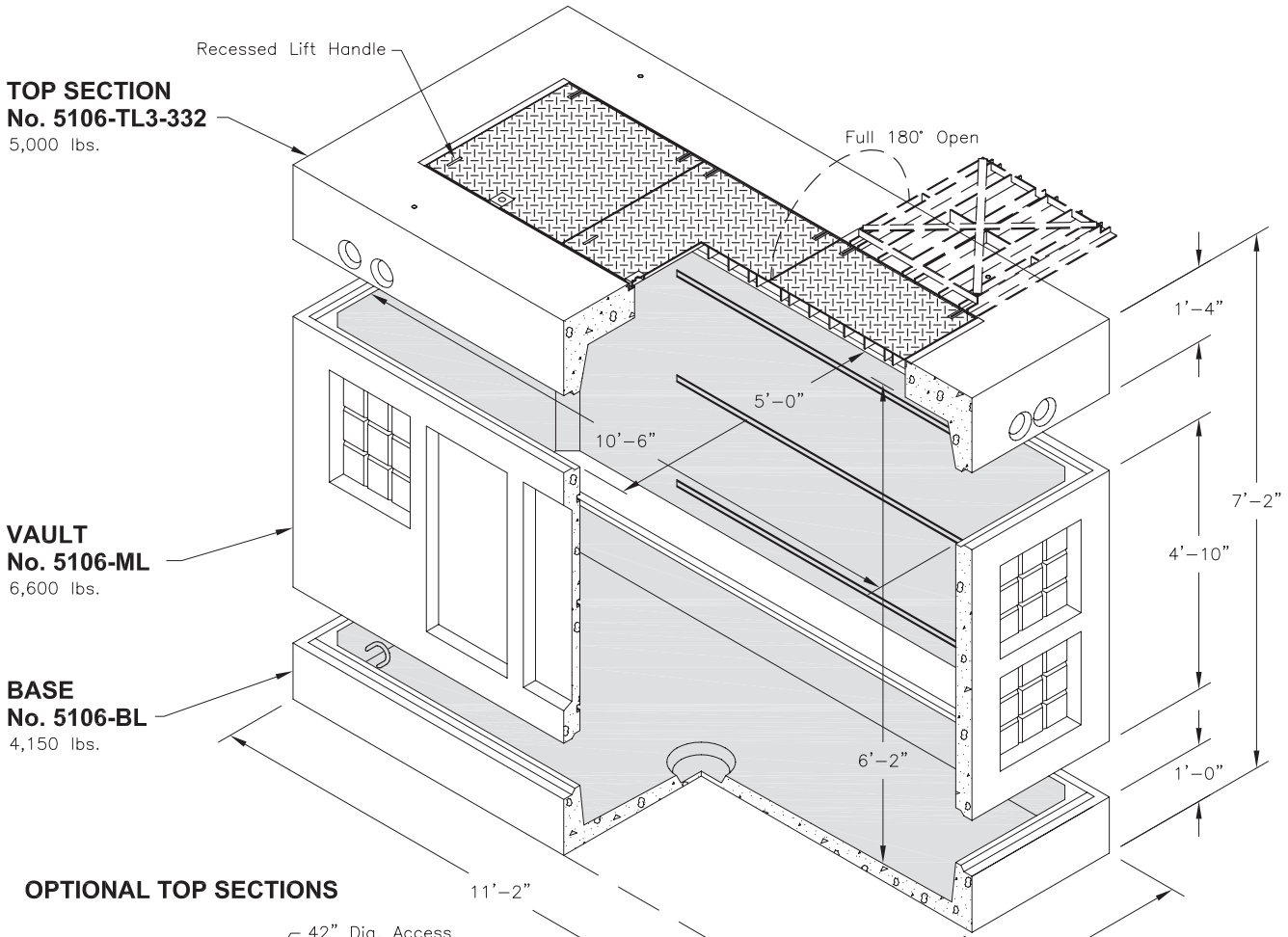

OPTIONAL TOP SECTIONS

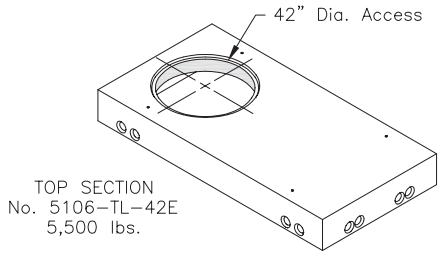

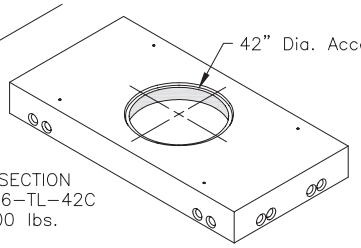

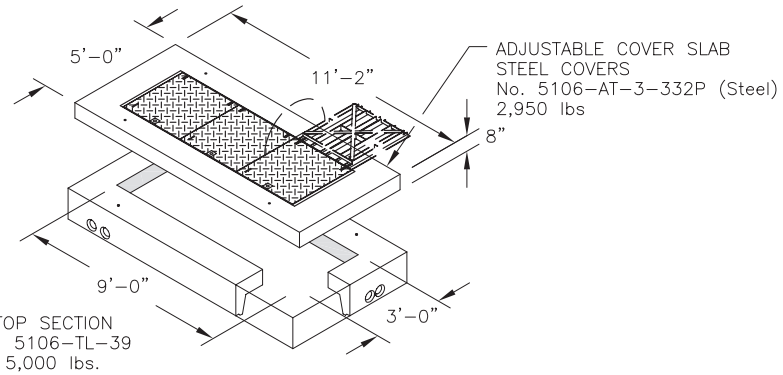

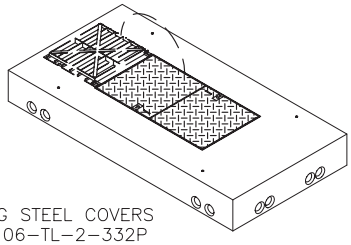

Non Skid Covers Available

FOR DETAILS, SEE REVERSE SIDE >>

Items Shown Are Subject To Change Without Notice
Issue Date: January 2006

©1970-2006 Oldcastle Precast, Inc.

Mailing Address
PO Box 588
Auburn, WA 98071

Phone: 800.892.1538
Fax: 253.735.4201
Email: uvauburn@oldcastleprecast.com

uvauburn.com
a division of Oldcastle Precast, Inc.

ELBOWS-200AMP

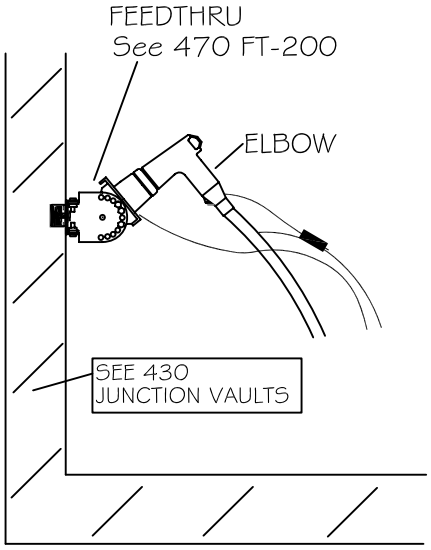

CONCRETE VAULTS

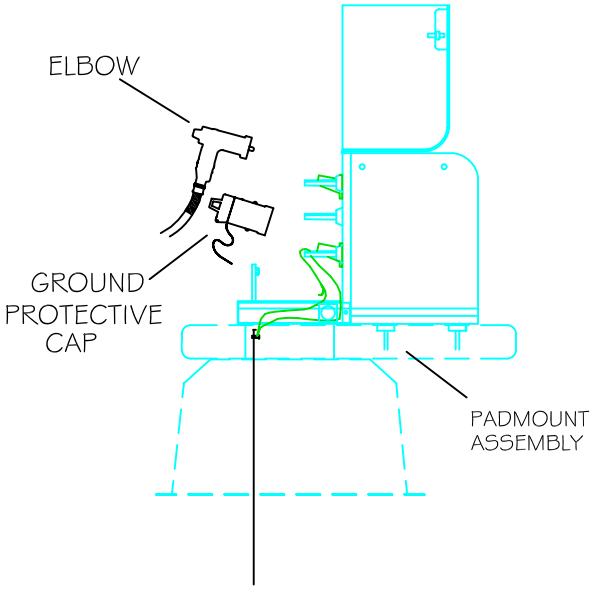

PADMOUNTS
J-BOX/TRANSFORMERS

200AMP - ELBOWS & GROUND PROT. CAPS

ASSEMBLY #	DESCRIPTION	15KV	25KV	STOCK #
EL2	ELBOW LB 2 AL 15KV	X		9300400
EL1/0	ELBOW LB 1/O AL15KV	X		9300500
EL4/0	ELBOW LB 4/0 AL 15KV	X		9301000
EL250	ELBOW LB 250 AL 15KV	X		9301200
+EL1/0	ELBOW LB 1/O AL 25KV		X	9301500
+EL4/0	ELBOW LB 4/0 AL 25KV		X	9302000
GPC-200	xxx GRND PROTECT CAP 15KV	X		9410500
+GPC-200	xxx GRND PROTECT CAP 25KV		X	9410600

FEED THRU - 200AMP

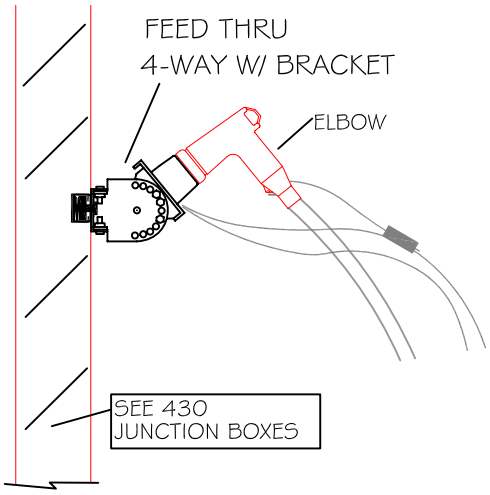

SIDE VIEW

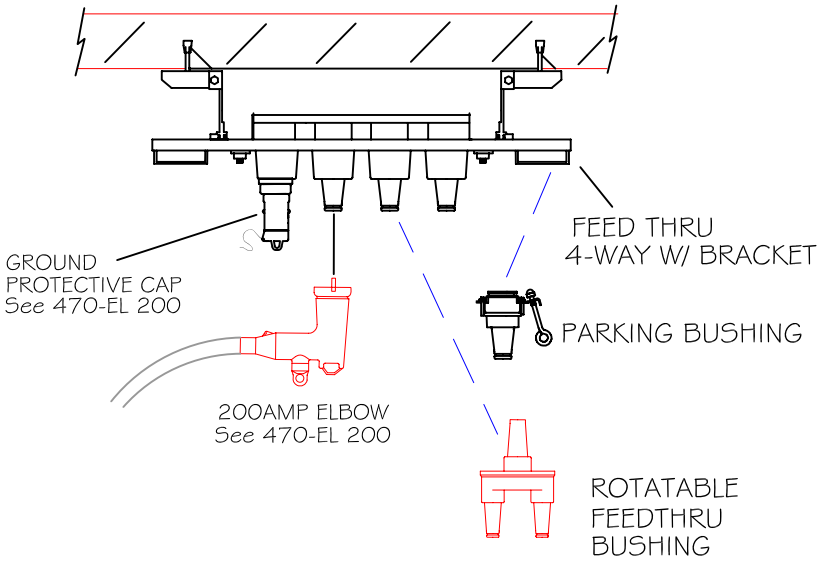

TOP VIEW

200AMP - FEEDTHRU, PARK BUSHING, PROTECTIVE CAPS

ASSEMBLY #	DESCRIPTION	15KV	25KV	STOCK #
FT-RO200	FEEDTHRU ROTATE 200A 15KV	X		9399800
+FT-RO200	FEEDTHRU ROTATE 200A 25KV		X	9399825
FT-2WP	FEEDTHRU 2W PORT 15KV (XXX)	X		9400000
FT-2WB	FEEDTHRU 2W 15KV W/BRACKET	X		9400200
FT-3WB	FEEDTHRU 3W 15KV W/BRACKET	X		9400300
FT-4WB	FEEDTHRU 4W 15KV W/BRACKET	X		9400400
FT-2WS	FEEDTHRU 2W 15KV W/STRAPS	X		9400500
FT-3WS	FEEDTHRU 3W 15KV W/STRAPS	X		9400600
FT-4WS	FEEDTHRU 4W 15KV W/STRAPS	X		9400700
FT-5WS	FEEDTHRU 5W 15KV W/STRAPS	X		9400800
+FT-2WB	FEEDTHRU 2W 25KV W/BRACKET		X	9401200
+FT-3WB	FEEDTHRU 3W 25KV W/BRACKET		X	9401300
+FT-4WB	FEEDTHRU 4W 25KV W/BRACKET		X	9401500
+FT-2WS	FEEDTHRU 2W 25KV W/STRAPS		X	9400900
+FT-3WS	FEEDTHRU 3W 25KV W/STRAPS		X	9401000
+FT-4WS	FEEDTHRU 4W 25KV W/STRAPS		X	9401100
PB-200	xxx PARK BUSH 200A 15KV	X		9402800
+PB-200	xxx PARK BUSH 200A 25KV		X	9402900

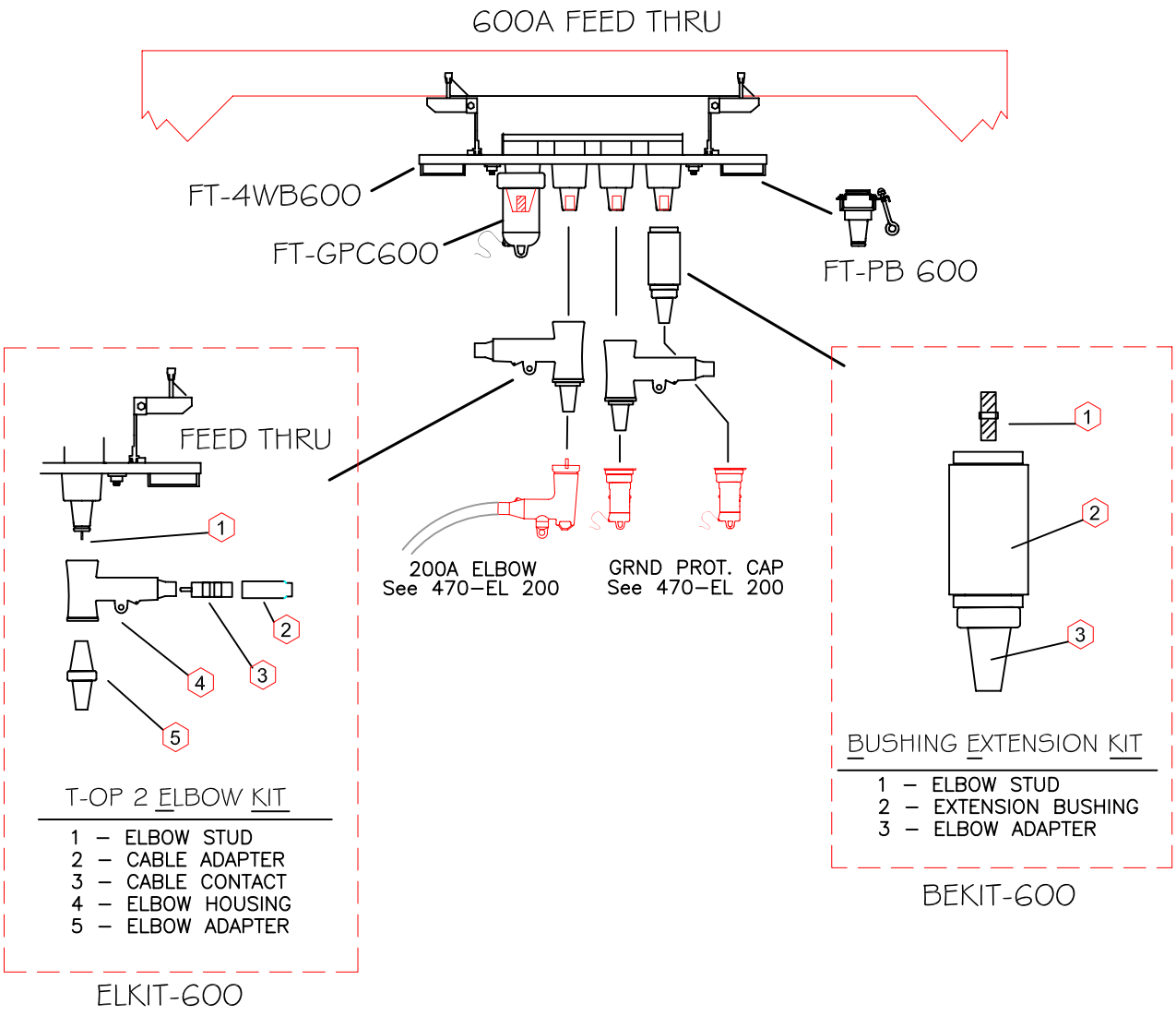

600AMP - FEEDTHRU, PARK BUSHING, PROTECTIVE CAPS

ASSEMBLY #	DESCRIPTION	15KV	25KV	STOCK #
FT-4WB600	FEEDTHRU 4W 600A W/BRACKET 15/25KV	x	x	9401800
FT-PB600	PARK BUSHING 600A 15/25KV	x	x	9403200
FT-GPC600	GRND PROTECTIVE CAP 600A 15/25KV	x	x	9410900

600AMP - ELBOW KITS, EXTENSION BUSHINGS KITS

ASSEMBLY #	DESCRIPTION	15KV	25KV	STOCK #
ELKIT600	TOP 2 750 AL 600A ELBOW KIT	x	x	9304200
BEKIT600	BUSHING EXTENSION KIT 600A	x	x	9303101

DATE: 08/20/04
REV: 5/24/2007
DRAWN: JK/DT
CHK: RA/DP
FILE: H:\ENGSTANDARDS\05 SPEC\400-UG\470\FT-600

PG 1 OF 1

GROUP: UNDERGROUND - FEED THRU - 600AMP
TYPE: 600AMP (15KV-25KV)

OPTIONS: SEE 470 FT-600B FOR SPECIAL ELBOW ASSEMBLIES

FT-600

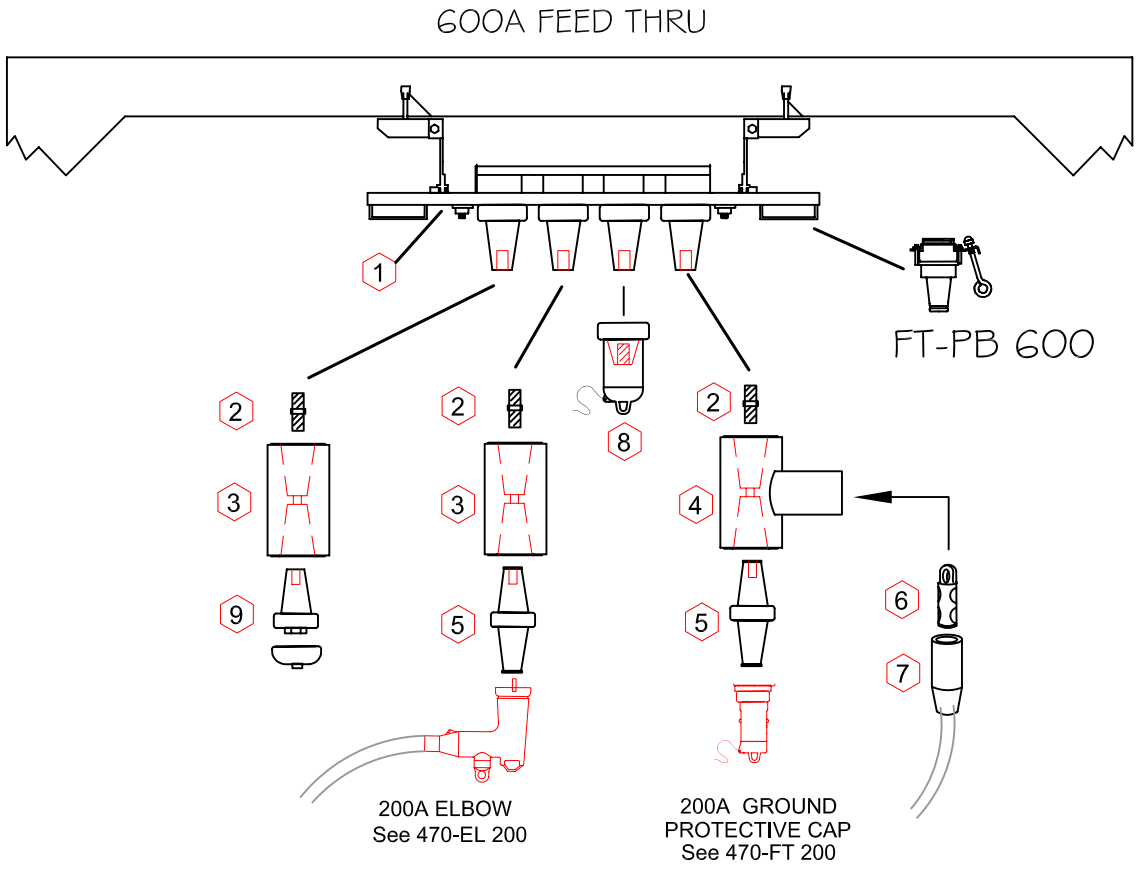

600AMP - FEEDTHRU, TERMINATION OPTIONS

ITEM	ASSEMBLY#	DESCRIPTION	15KV	25KV	STOCK #
1	FT-4WB600	FEEDTHRU 4W 600A 15/25KV	X	X	9401800
2	FT-ES5/8	xxx ELBOW STUD 5/8" 600A	X	X	9303000
3	FT-EXB	EXTENSION BUSHING W/STUD	X	X	9303300
4	FT-ELH	ELBOW HOUSING 600A	X	X	9304600
5	FT-ELA	ELBOW ADAPTER 600A/200A	X	X	9303100
6	FT-CC	xxx CABLE CONTACT 750 600A	X	X	9303400
7	FT-CA	xxx CABLE ADAPTER 750 600A	X	X	9303500
8	FT-GPC600	GRND PROTECTIVE CAP 600A 15/25KV	X	X	9410900
9	FT-DE600	ELBOW DE PLUG W/CAP 600A	X	X	9302900

GROUP: UNDERGROUND - FEED THRU - 600AMP
TYPE: 600AMP (15KV-25KV)

OPTIONS:

FT-600B

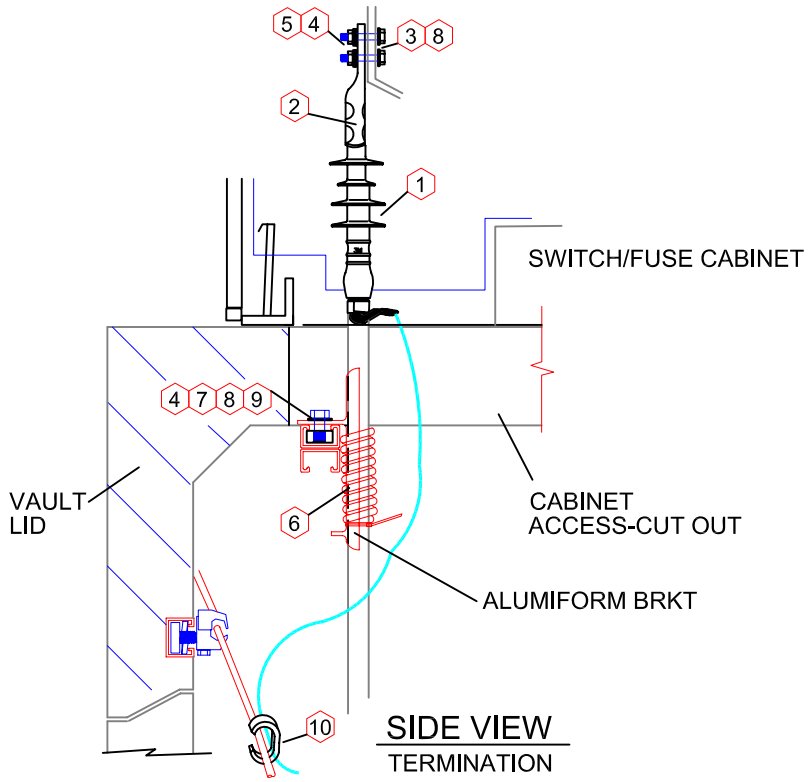

		QUANTITY						
		200A/15KV			600A/15-25kv	200A/25KV		
ITEM	DESCRIPTION	TMV-1/0	TMV-4/0	TMV-250	TMV-750	+TMV-1/0	+TMV-4/0	STOCK #
1	TERM VAULT 1/0 AL 15KV RUBBER	1						9321601
"	TERM 4/0 AL 15KV RUBBER		1					9322000
"	TERM 250 AL 15KV RUBBER			1				9322200
"	TERM 750 AL 15KV RUBBER				1			9324300
"	TERM 1/0 AL 25KV RUBBER					1		9324000
"	TERM 4/0 AL 25KV RUBBER						1	9324200
2	1/0 2-HOLE JUMPER PADDLE	1				1		9321610
"	4/0 2-HOLE JUMPER PADDLE		1				1	9322040
"	350 2-HOLE JUMPER PADDLE			1				9324700
"	750 2-HOLE JUMPER PADDLE				1			9324400
3	xxx - SS BOLT - 2-1/2" X 1/2	2	2	2	2	2	2	3134000
4	xxx - SS BELEVILLE WASHER 1/2"	2	2	2	2	2	2	3330100
5	xxx - BRONZ NUT 1/2"	2	2	2	2	2	2	3228800
6	xxx - TERM ALUMIFORM MOUNT BRKT	1	1	1	1	1	1	9330800
7	xxx - SS BOLT - 1-1/4" x 1/2"	1	1	1	1	1	1	3132000
8	xxx - SS WASHER 1/2" ROUND	2	2	2	2	2	2	3330000
9	UNI-STRUT NUT 1/2"	1	1	1	1	1	1	3224000
10	COPPER CRIMP - (2-2)	1	0	0	0	1	0	6060700
10	COPPER CRIMP - (2-4)	0	1	1	0	0	0	6060500
10	COPPER CRIMP - (4/0-4/0)	0	0	0	1	0	0	6061400

DATE: 08/20/04
REV: 03/17/06
DRAWN: JK/DT
CHK: RA/DP
PG 1 OF 1
FILE: H:\ENGSTANDARDS\05 SPEC\400\470\TM-V

GROUP: TERMINATORS-UNDERGROUND VAULT
DETAIL: TERMINATORS - LUGS (JUMPER PADDLES)-MOUNTING BRAKETS

OPTIONS: SEE ABOVE

TMV-SET

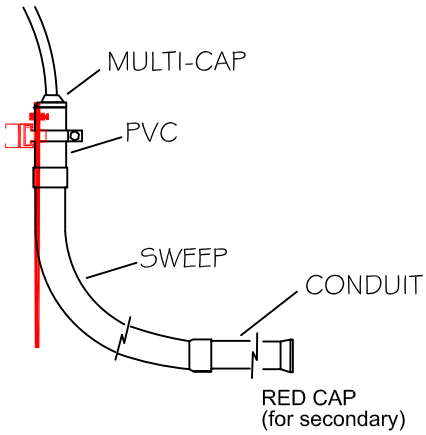

CONDUIT & SWEEPS
PADMOUNTS

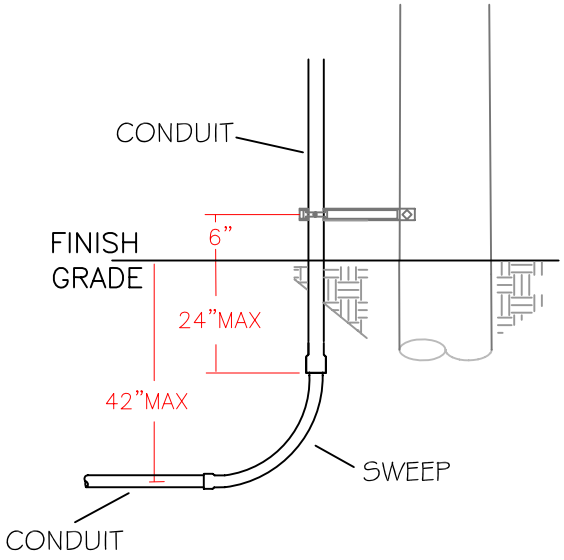

CONDUIT & SWEEPS
RISERS

	SIZE					
	1-1/2"	2"	2-1/2"	3"	4"	6"
CONDUIT						
SCHEDULE-40 (PVC)		8030800		8031200	8031600	8032400
SCHEDULE-80 (PVC)		8040800		8041000	8041200	8041400
EMPTY HDPE DUCT		8040700		8031230		
SPLIT DUCT (SPECIAL USE)		8052000		8053000	8054000	
FLEX DUCT		8065000		8065300	8065600	
SWEEPS-PVC						
SWP-22-1/2°	8131900	8132600		8133300	8135000	
SWP-45°	8132000	8132700		8133400	8135100	
SWP-90°	8132100	8132800		8133500	8135200	8136400

SWEEPS-GALV						
SWP-G 45°					8124700	
SWP-G 90°		8122400		8123400	8124900	8126100

DATE: 08/20/04
REV: 03/27/06
DRAWN: JK/DT
CHK: RA/DP
FILE: H:\ENGSTANDARDS\05 SPECBOOK\400\480\480-CSF-1

PD #1 of Gladstone County

PG 1 OF 1

GROUP: UNDERGROUND DISTRIBUTION
TYPE: CONDUIT, SWEEPS & FITTINGS

OPTIONS: SEE ABOVE

480-CSF-1

CONDUIT, SWEEPS, & FITTINGS - CSF

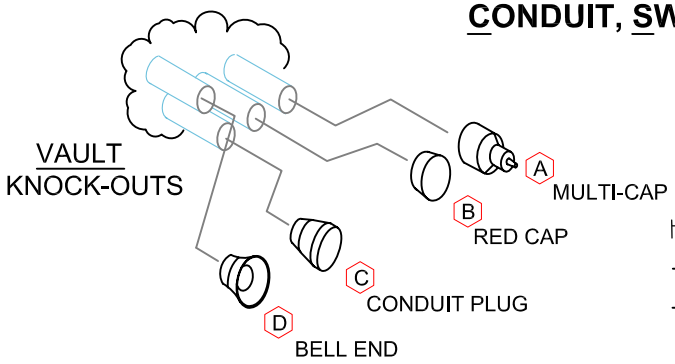

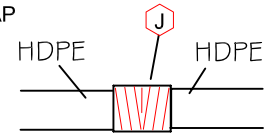

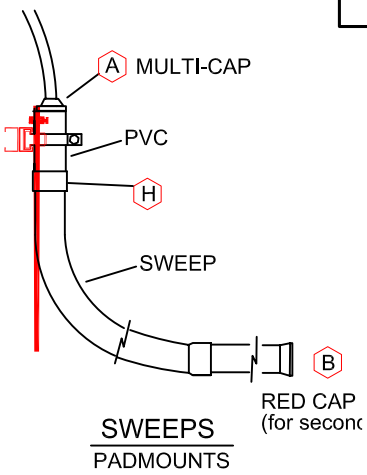

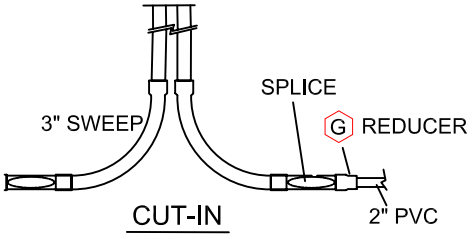

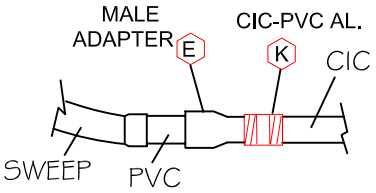

CF-CONDUIT FITTINGS

		SIZE					
	TYPE	1-1/2"	2"	2-1/2"	3"	4"	6"
A	MULTI CAP	9060100 CSF-1.5A	9060200 CSF-2A		9060300 CSF-3A	9060304 CSF-4A	
B	RED CAP		9060320 CSF-2B		9060400 CSF-3B		
C	PLUG CONDUIT					8990100 CF-C4	
D	BELL ENDS	8405600 CSF-1.5D	8405800 CSF-2D		8406200 CSF-3D	8406600 CSF-4D	8407700 CSF-6D
E	ADAPTER (MALE)	8302000 CSF-1.5E	8303200 CSF-2E		8304000 CSF-3E	8304800 CSF-4E	8306400 CSF-6E
F	ADAPTER (FEMALE)	8302300 CSF-1.5F	8303600 CSF-2F		8304400 CSF-3F	8305200 CSF-4F	8306800 CSF-6F
G	REDUCER	8307800 (CSF-1G)					
			8308000 (CSF-2G)				
				8308200 (CSF-3G)			
					8308240 (CSF-4G)		
H	COUPLING (PVC)	8381500 CSF-1.5H	8383200 CSF-2H	8383300 CSF-2.5H	8384000 CSF-3H	8384800 CSF-4H	8386400 CSF-6H
I	COUPLING (GALV.)		8383400 CSF-2I		8384200 CSF-3I	8385000 CSF-4I	8386600 CSF-6I
J	HDPE-HDPE AL	8381700 CSF-1.5J	8381900 CSF-2J		8382303 CSF-3K		
K	CIC-PVC AL.	8382100 CSF-1.5K	8382000 CSF-2K		8382300 CSF-3K		
L	CIC-PVC AL.(MALE)	8382100 CSF-1.5L					

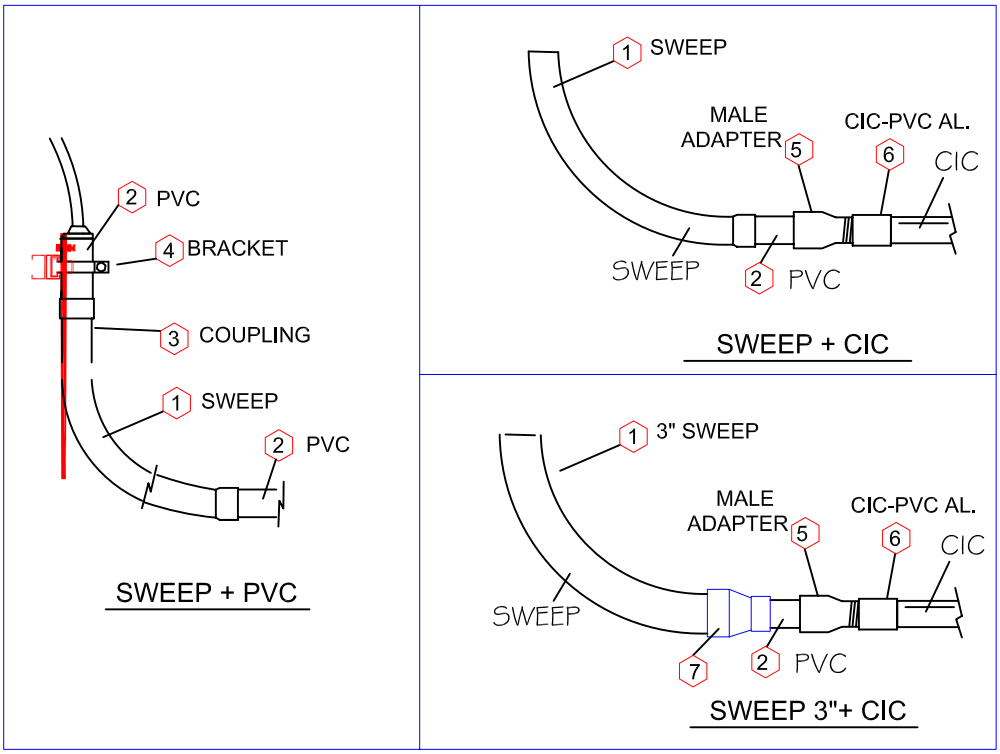

SWEEP + PVC

ITEM	DESCRIPTION	STOCK #
1	xxx - SWEEP 2 PVC 90°	8132800
2	CONDUIT 2 SCH 40 PVC	8030800
3	xxx - COUPLING 2 PVC	8383200
4	xxx - CLAMP 2-PIECE 2" STANDOFF	8955520

SWEEP + CIC

ITEM	DESCRIPTION	STOCK #
1	xxx - SWEEP 2 PVC 90°	8132800
2	CONDUIT 2 SCH 40 PVC	8030800
5	xxx - ADAPTER MALE 2" PVC	8303200
6	xxx - COUPLING 2" PVC-CIC AL	8382000

SWEEP 3" + CIC (USE FOR SPLICE)

ITEM	DESCRIPTION	STOCK #
1	xxx - SWEEP 3 PVC 90°	8133500
2	CONDUIT 3 SCH 40 PVC	8031200
3	xxx - COUPLING 3 PVC	8384000
5	xxx - ADAPTER MALE 2" PVC	8303200
6	xxx - COUPLING 2" PVC-CIC AL	8382000
7	xxx - REDUCER 3 TO 2 PVC	8308000

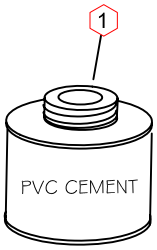

PVC CEMENT
8995900

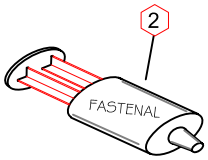

PVC/CIC CEMENT (EPOXY)
8995950

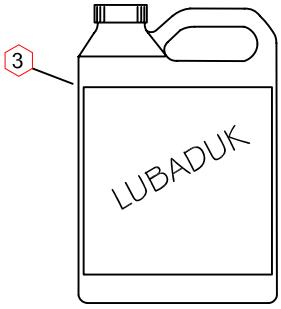

CABLE LUBE
9079900

PVC CEMENT AND EPOXY

ITEM	DESCRIPTION	STOCK #	SPEC. CODE
1	xxx - PVC CEMENT	8995900	PVC CEM.
2	XXX - PVC/CIC CEMENT "FASTENAL EPOXY"	8995950	PVC-CIC CEM

CABLE LUBRICANT

ITEM	DESCRIPTION	STOCK #	SPEC. CODE
3	xxx - CABLE LUBE	9079900	CABLE LUBE

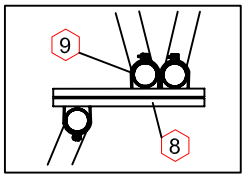

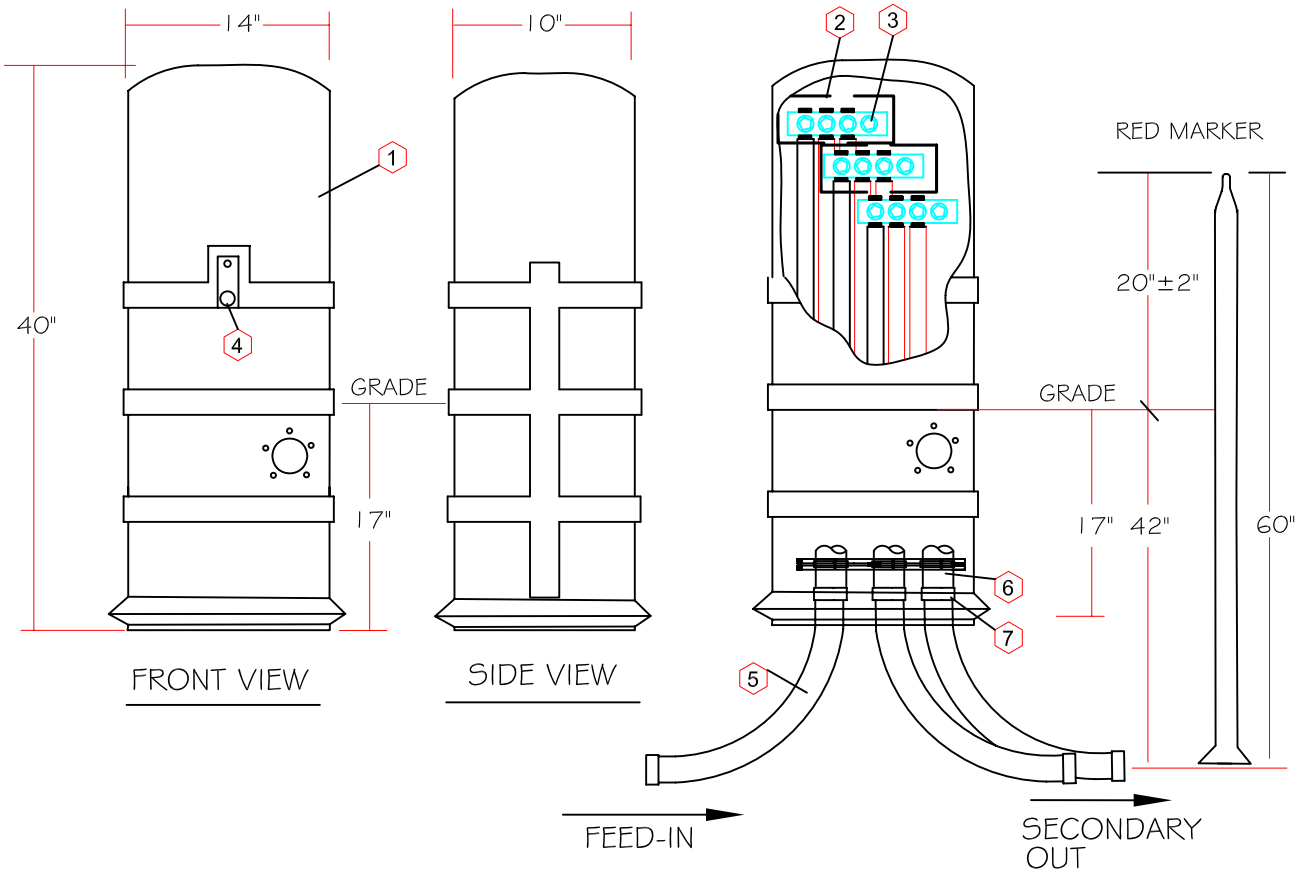

ITEM	DESCRIPTION	FEED JSP	1-OUT JSP-1	2-OUT JSP-2	STOCK #
1	SECONDARY PEDESTAL	1	1	1	9970400
2	xxx M-LUG SEC PED 6H 6-350	3	3	3	6605500
3	xxx SECONDARY PED CONN. COVER	2	2	2	6605600
4	xxx LOCKING RING	1	1	1	9979900
5	xxx SWEEP 3 PVC 90°	1	2	3	8133500
6	xxx COUPLING 3 PVC	1	2	3	8384000
7	CONDUIT 3 SCH 40 PVC	10FT	10FT	10FT	8031200
8	xxx UNI-STRUT 24 GALV	1	1	1	8995500
9	xxx CLAMP 2-PIECE 3 STANDOFF	1	2	3	8955730
10	xxx RED CONDUIT STUBOUT MARKER	0	1	2	9059700

DATE: 08/20/04
REV: 5/24/2007
DRAWN: JK/DT
CHK: RA/DP
PG 1 OF 1
FILE: H:\ENGSTANDARDS\05 SPEC\400-DISTRIB_UG\490-SEC\JSP

GROUP: UNDERGROUND DISTRIBUTION
TYPE: JUNCTION - SECONDARY PEDESTAL

OPTIONS: FEED -IN, 1-OUT, 2-OUT

490-JSP

600V (14-CONNECTION) TERMINATION ENCLOSURE

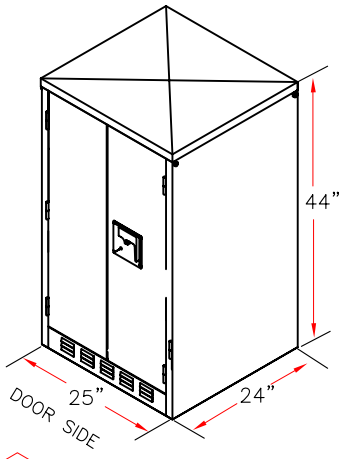

2
TERMINATION CABINET

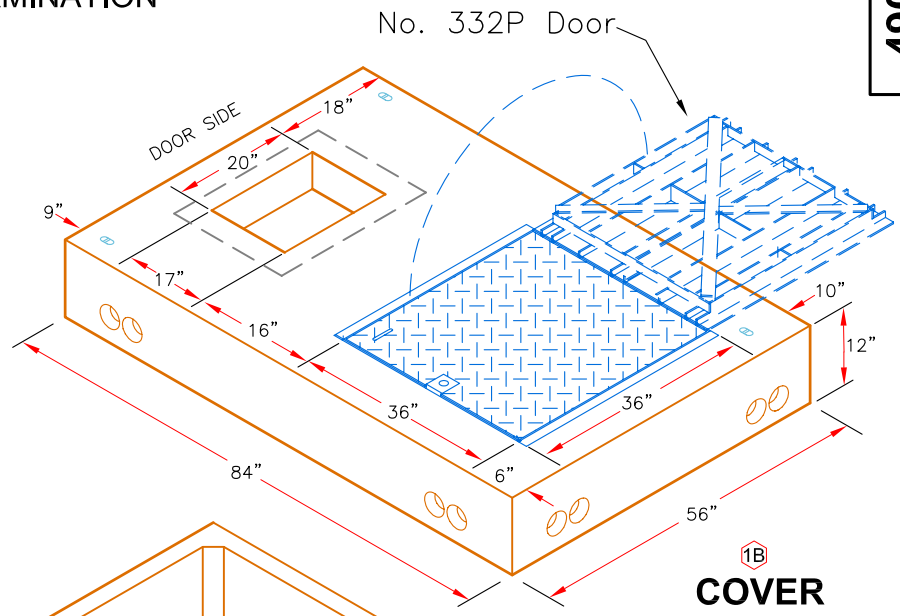

1B
COVER

No. 577-BL
6,600 lbs.

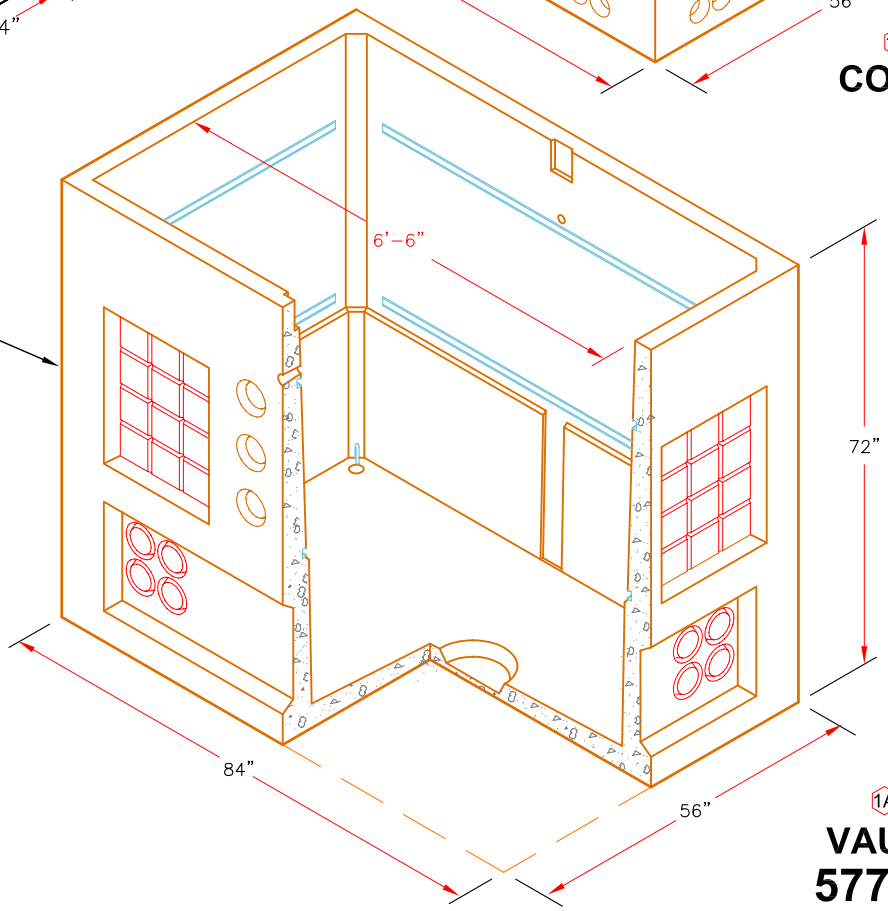

1A
VAULT
577-LA

ITEM	DESCRIPTION	QUANTITY JSP3-14	STOCK #
1A	VAULT 84 x 56 x 72 w/o COVER	1	9975500
1B	COVER 84 x 56 x 12 3PH SEC CAB (14)	1	9975501
2	SEC TERM CAB 3PH (14) 2-750	1	9970414

SEE PAGE 2 FOR CABINET DETAILS

DATE: 08/20/04
REV: 5/24/2007
DRAWN: DT
CHK: RA/DP
PG 1 OF 1
FILE: H:\ENGSTANDARDS\05 SPEC\400-DISTRIB_UG\490-SEC\JSP3-14

GROUP: UNDERGROUND - SECONDARY
TYPE: 3PH -TERMINATION SECONDARY PEDESTAL (600V)

OPTIONS: 20 CONNECTION: JSP3-20
30 CONNECTION: JSP3-30

JSP3-14

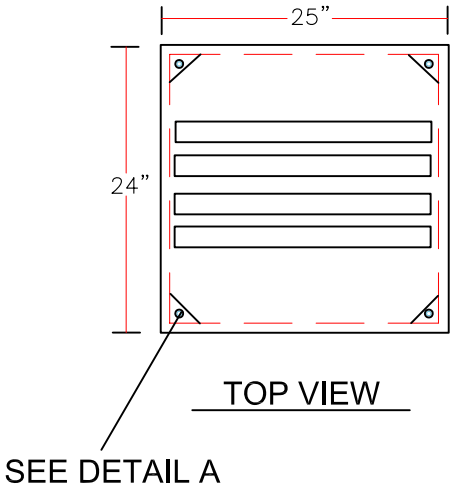

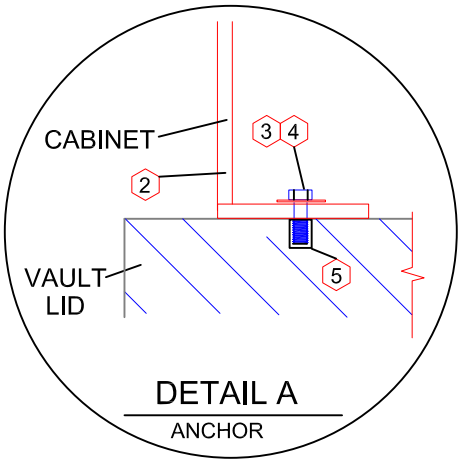

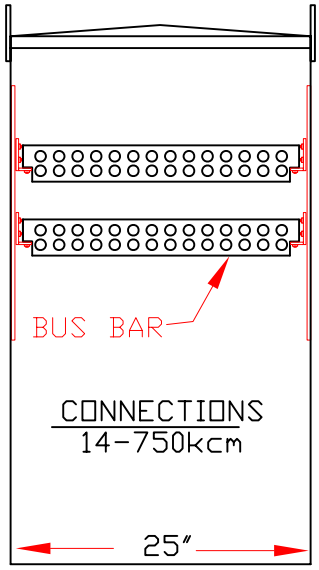

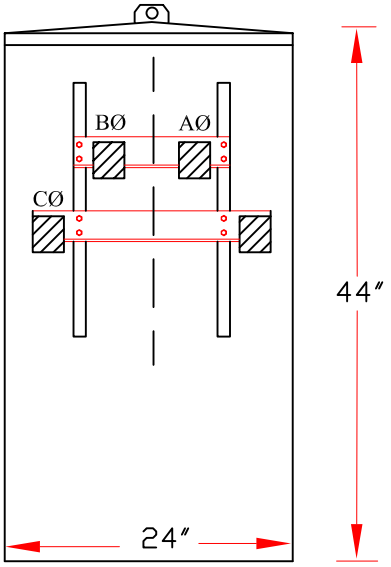

ITEM	DESCRIPTION	QUANTITY JSP3-14	STOCK #
2	SEC TERM CAB 3PH (14) 2-750	1	9970414
3	xxx BOLT MACH 1-3/4 x 1/2"	4	3132800
4	xxx ROUND WASHER 1/2"	4	3280800
5	xxx CONCRETE ANCHOR 1/2"	4	9976505
6	xxx TRANSFORMER LOCK	2	9979900

BUS BARS – TWO 3/8” ALLEN HEAD SET SCREW PER CABLE POSITION. (CABLE SIZE #2 THROUGH 750kcm) EACH BUS BAR SHALL BE EQUIPPED WITH AN INSULATED PLASTIC COVER

DATE: 08/20/04
REV: 5/24/2007
DRAWN: DT
CHK: RA/DP
PG 1 OF 1
FILE: H:\ENGSTANDARDS\05 SPEC\400-DISTRIB_UG\490-SEC\JSP3-14

GROUP: UNDERGROUND - SECONDARY
TYPE: 3PH - TERMINATION SECONDARY PEDESTAL (600V)

OPTIONS: 20 CONNECTION: JSP3-20
30 CONNECTION: JSP3-30

JSP3-14

600V (22-CONNECTION) TERMINATION ENCLOSURE

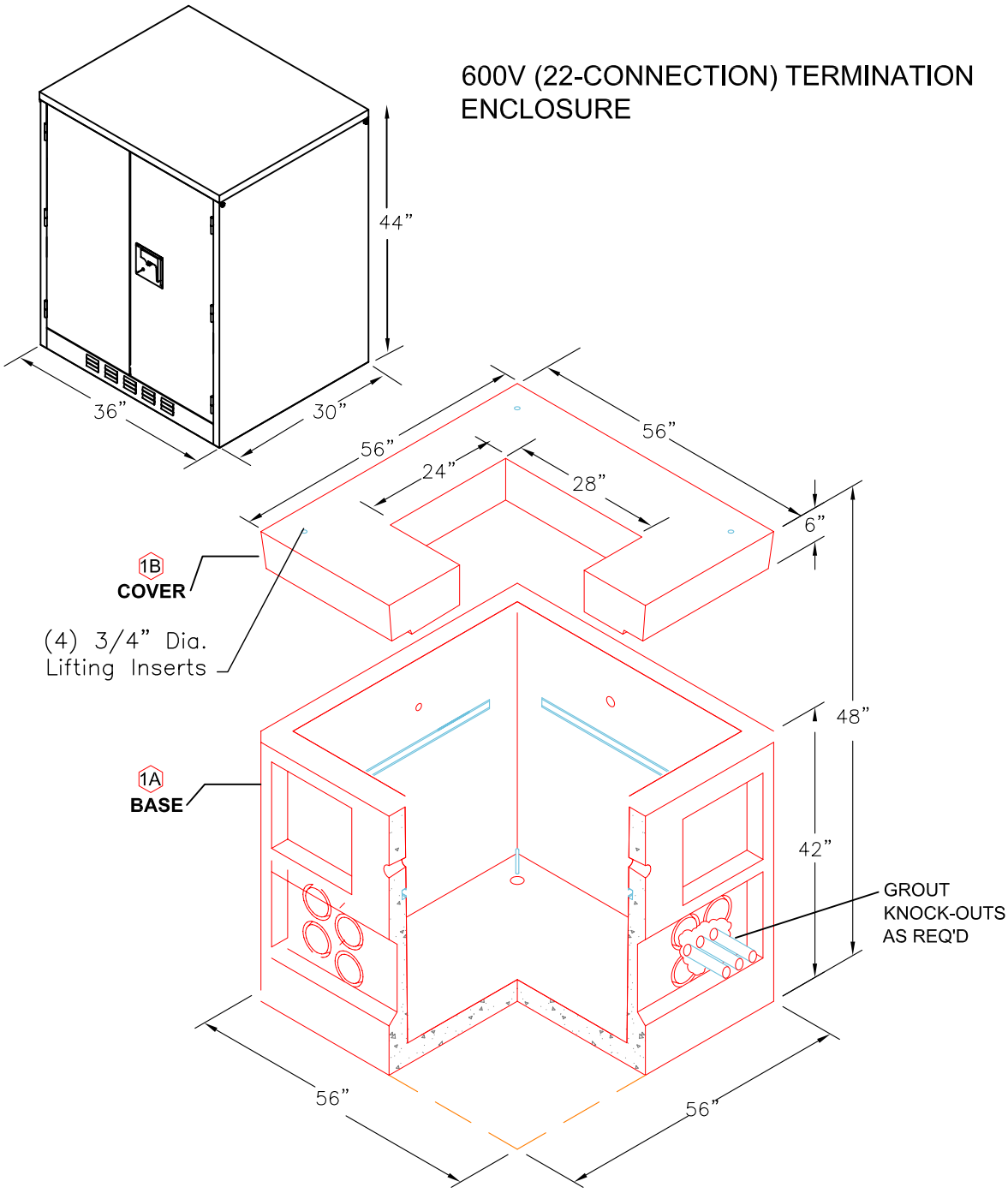

ITEM	DESCRIPTION	QUANTITY JSP3-20	STOCK #
1A	VAULT 56 x 56 x 42 w/o COVER	1	9975400
1B	COVER 56 x 56 x 6 3PH SEC CAB (22)	1	9975422
2	SEC TERM CAB 3PH (20) 2-750	1	9970420

SEE PAGE 2 FOR GROUNDING DETAILS
SEE PAGE 3 FOR CABLE RACKING DETAILS

DATE: 08/20/04
REV: 5/24/2007
DRAWN: JK/DT
CHK: RA/DP
PG 1 OF 1
FILE: H:\ENGSTANDARDS\05 SPEC\400-DISTRIB_UG\490-SEC\TSP

GROUP: UNDERGROUND - SECONDARY
TYPE: TERMINATION SECONDARY PEDESTAL (600V)

OPTIONS:

JSP3-20

600V (22-CONNECTION) TERMINATION ENCLOSURE

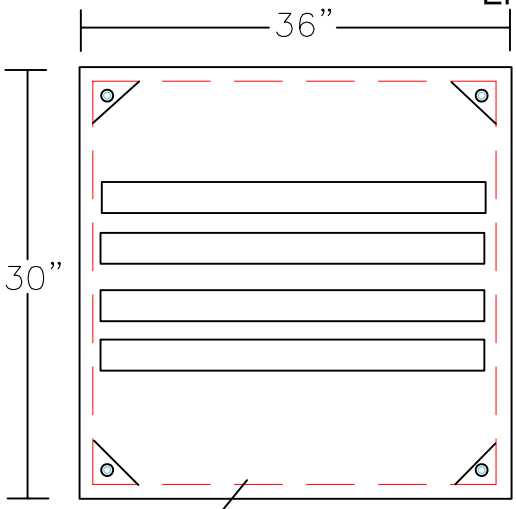

TOP VIEW

SEE DETAIL A

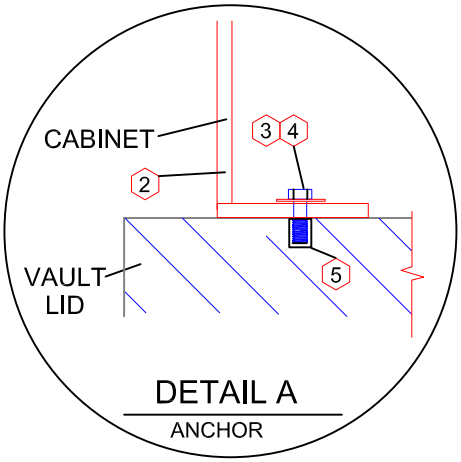

DETAIL A

ANCHOR

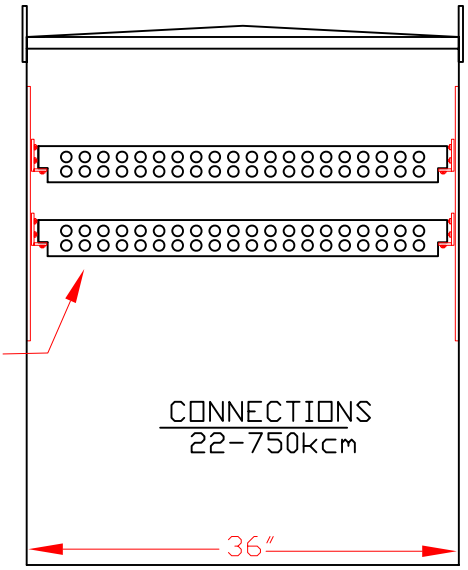

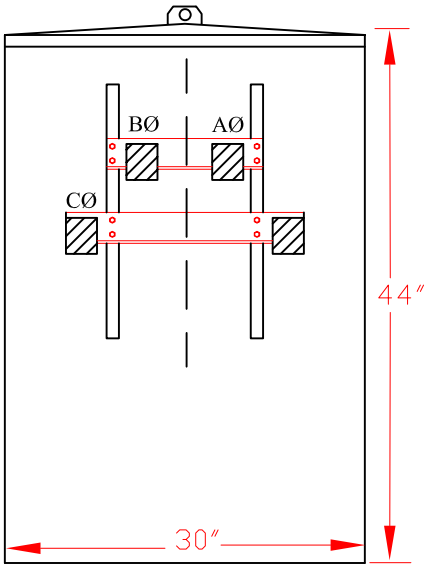

ITEM	DESCRIPTION	QUANTITY JSP3-20	STOCK #
2	SEC TERM CAB 3PH (20) 2-750	1	9970420
3	xxx BOLT MACH 1-3/4 x 1/2"	4	3132800
4	xxx ROUND WASHER 1/2"	4	3280800
5	xxx CONCRETE ANCHOR 1/2"	4	9976505
6	xxx TRANSFORMER LOCK	2	9979900

DATE: 08/20/04
REV: 5/24/2007
DRAWN: JK/DT
CHK: RA/DP
PG 1 OF 1
FILE: H:\ENGSTANDARDS\05 SPEC\400-DISTRIB_UG\490-SEC\TSP

GROUP: UNDERGROUND - SECONDARY
TYPE: TERMINATION SECONDARY PEDESTAL (600V)

OPTIONS:

JSP3-20

600V (30-CONNECTION) TERMINATION ENCLOSURE

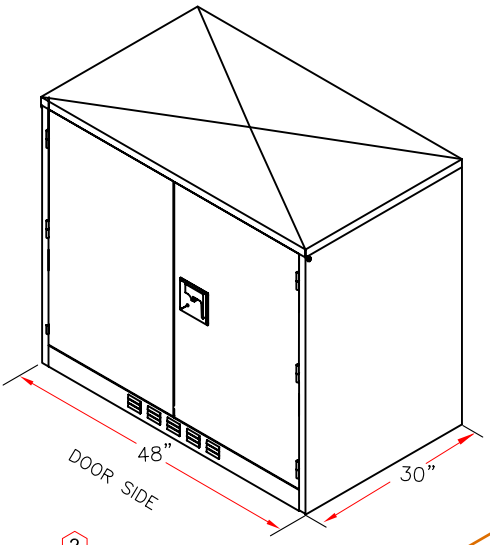

2
TERMINATION CABINET

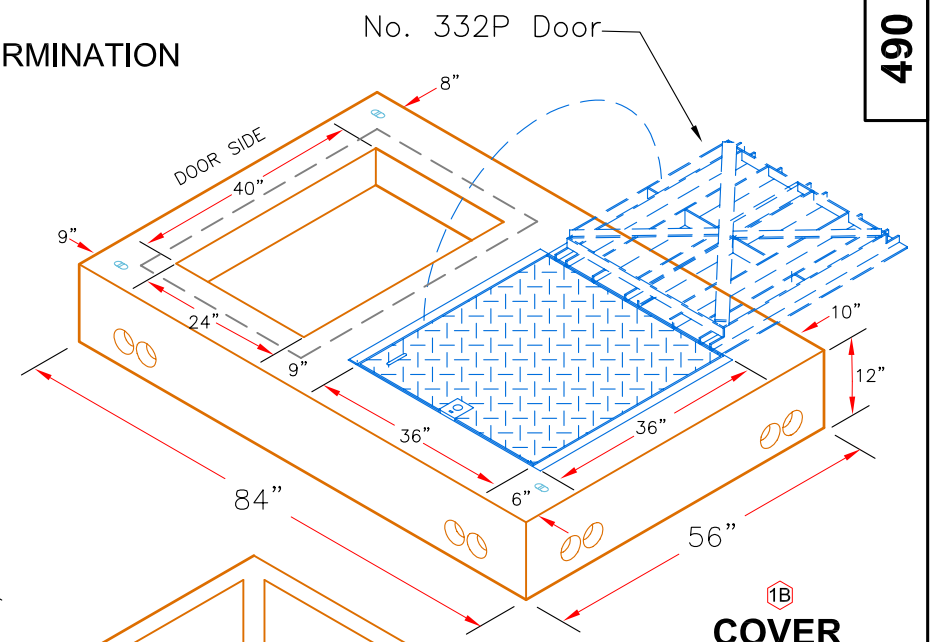

1B
COVER

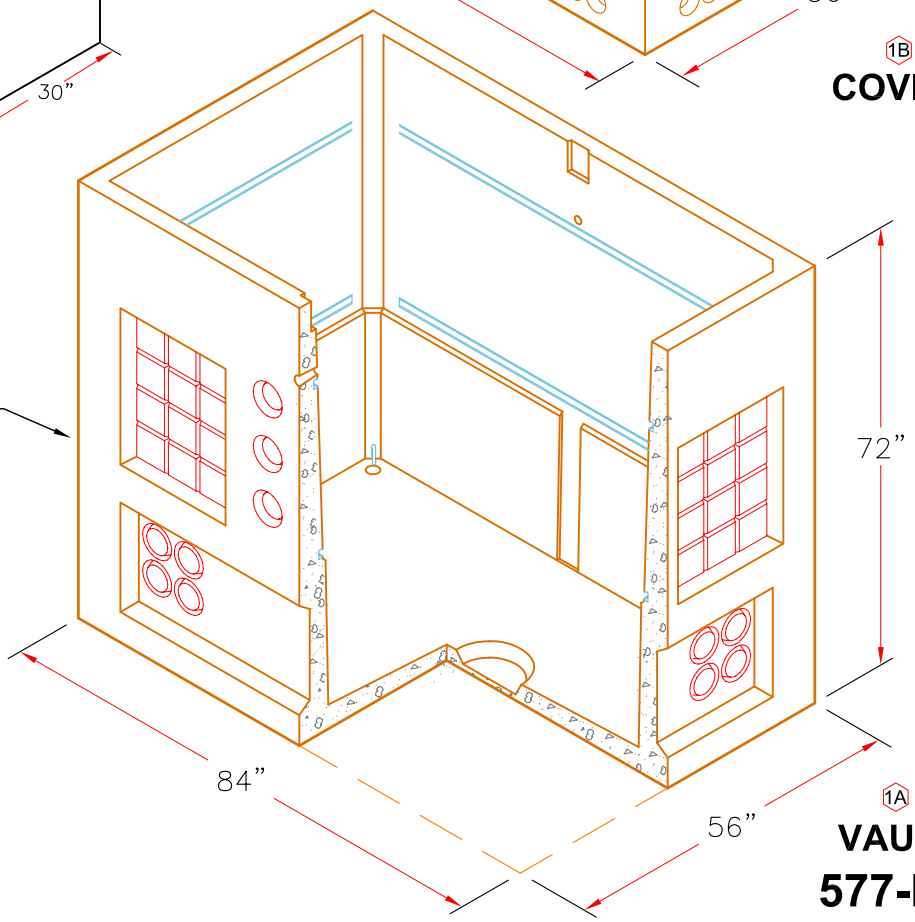

1A
VAULT
577-LA

ITEM	DESCRIPTION	QUANTITY JSP3-30	STOCK #
1A	VAULT 84 x 56 x 72 w/o COVER	1	9975500
1B	COVER 84 x 56 x 12 w/ STEEL DOORS	1	9975501

SEE PAGE 2 FOR CABINET DETAILS

DATE: 08/20/04
REV: 12/12/06
DRAWN: JK/DT
CHK: RA/DP
PG 1 OF 1
FILE: H:\ENGSTANDARDS\05 SPEC\400-DISTRIB_UG\490-SEC\TSP

GROUP: UNDERGROUND - SECONDARY
TYPE: TERMINATION SECONDARY PEDESTAL (600V)

OPTIONS:

JSP3-30

600V - (30 -CONNECTION) TERMINATION ENCLOSURE

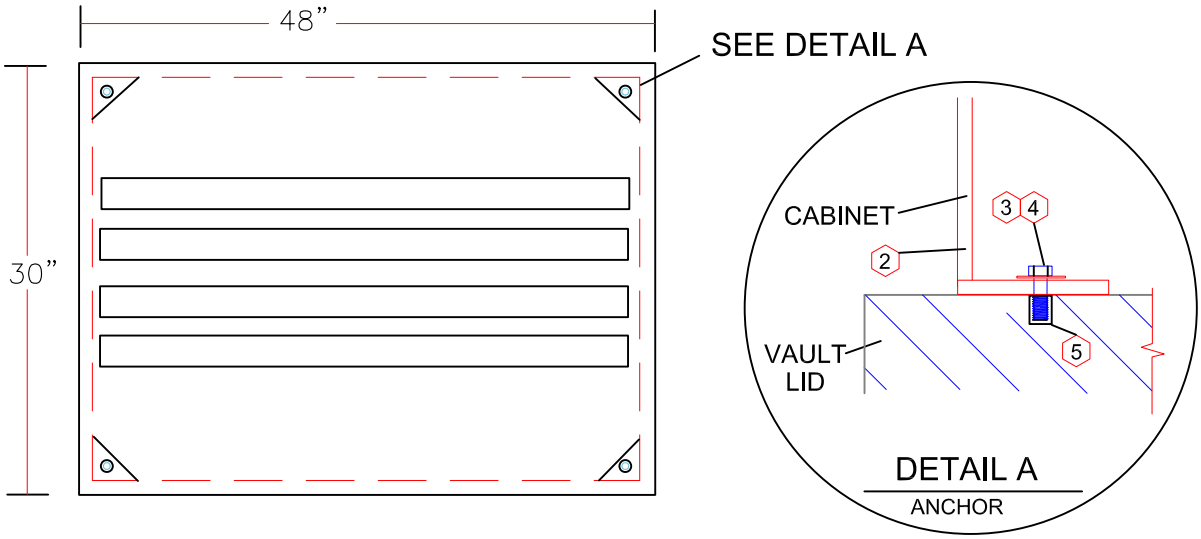

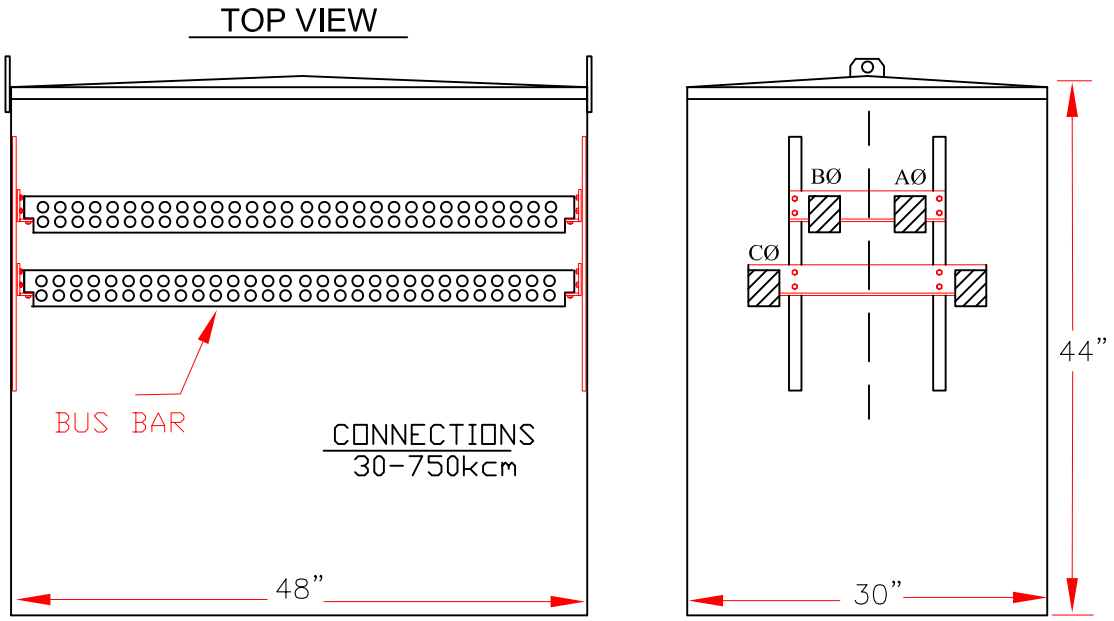

ITEM	DESCRIPTION	QUANTITY JSP3-20	STOCK #
2	SEC TERM CAB 3PH (30) 2-750	1	9970430
3	xxx BOLT MACH 1-3/4 x 1/2"	4	3132800
4	xxx ROUND WASHER 1/2"	4	3280800
5	xxx CONCRETE ANCHOR 1/2"	4	9976505
6	xxx TRANSFORMER LOCK	2	9979900

BUS BARS – TWO 3/8” ALLEN HEAD SET SCREW PER CABLE POSITION. (CABLE SIZE #2 THROUGH 750kcm)
EACH BUS BAR SHALL BE EQUIPPED WITH AN INSULATED PLASTIC COVER

DATE: 08/20/04
REV: 12/12/06
DRAWN: JK/DT
CHK: RA/DP
PG 1 OF 1
FILE: H:\ENGSTANDARDS\05 SPEC\400-DISTRIB_UG\490-SEC\TSP

GROUP: UNDERGROUND - SECONDARY
TYPE: TERMINATION SECONDARY PEDESTAL (600V)

OPTIONS:

JSP3-30